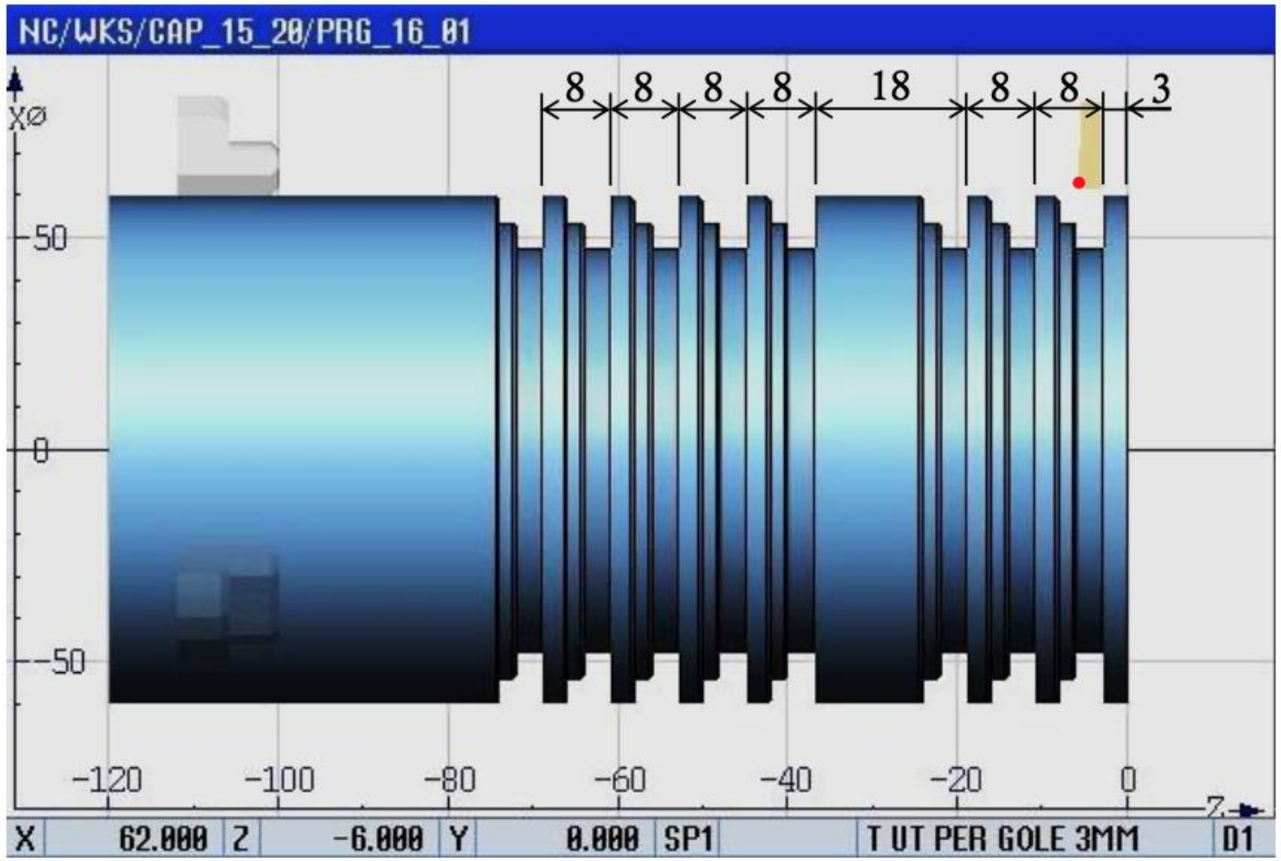

Fig. 126. Use of one single subprogram for the execution of multiple grooves

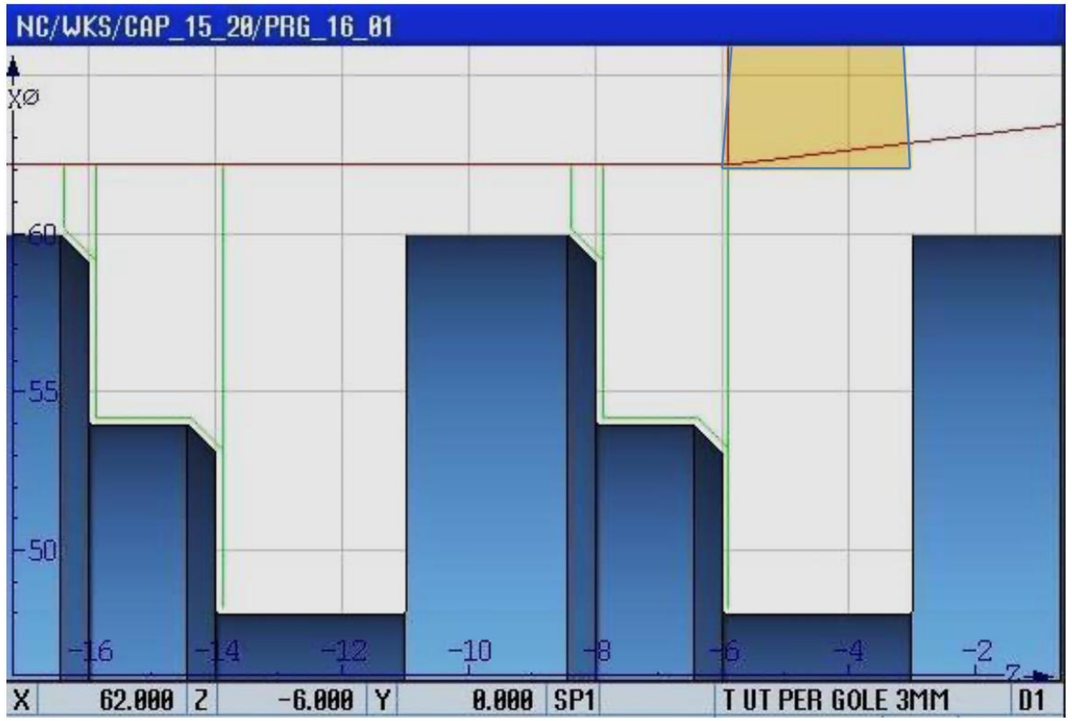

Fig. 127. Profile described in the subprogram

```
N80 G0 X82 Z2¶
N90 G1 X6 F0.2¶
N100 G0 X80 Z2¶
¶
N110 CYCLE62(,2,"PROFILE1","END1")¶
¶
N120 CYCLE952("con_temp",,"",2301311,0.1,0,0,3,0.1,0.1,0.5,0.1,0.1,0
¶
N130 G0 X200 Z200¶
¶
```

Fig. 128. Insertion of fixed cycles in a program

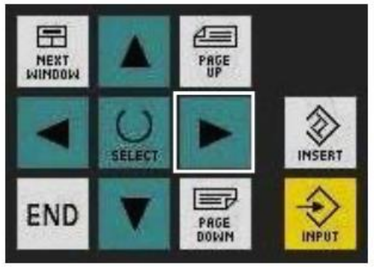


```
N80 G0 X82 Z2¶
N90 G1 X6 F0.2¶
N100 G0 X80 Z2¶
¶
N110 CYCLE62(,2,"PROFILE1","END1")¶
¶
N120 CYCLE952("con_temp",,"",2301311,0.1,0,0,3,0.1,0.1,0.5,0.1,0.
¶
N130 G0 X200 Z200¶
¶
```

Modifying button

Fig. 129. Button for the modification of a cycle after its insertion

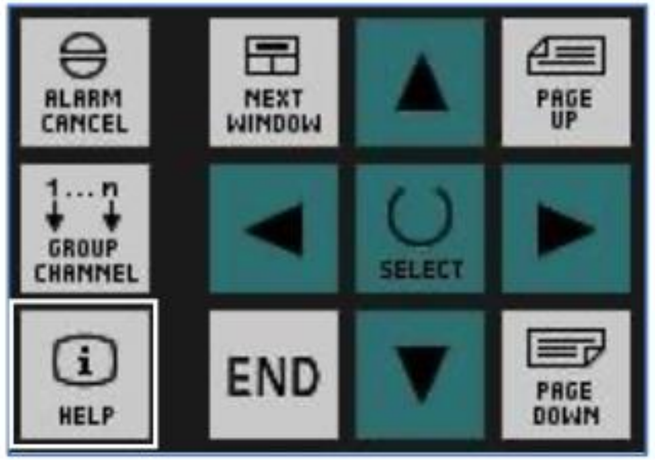

Fig. 130. HELP button on the control panel

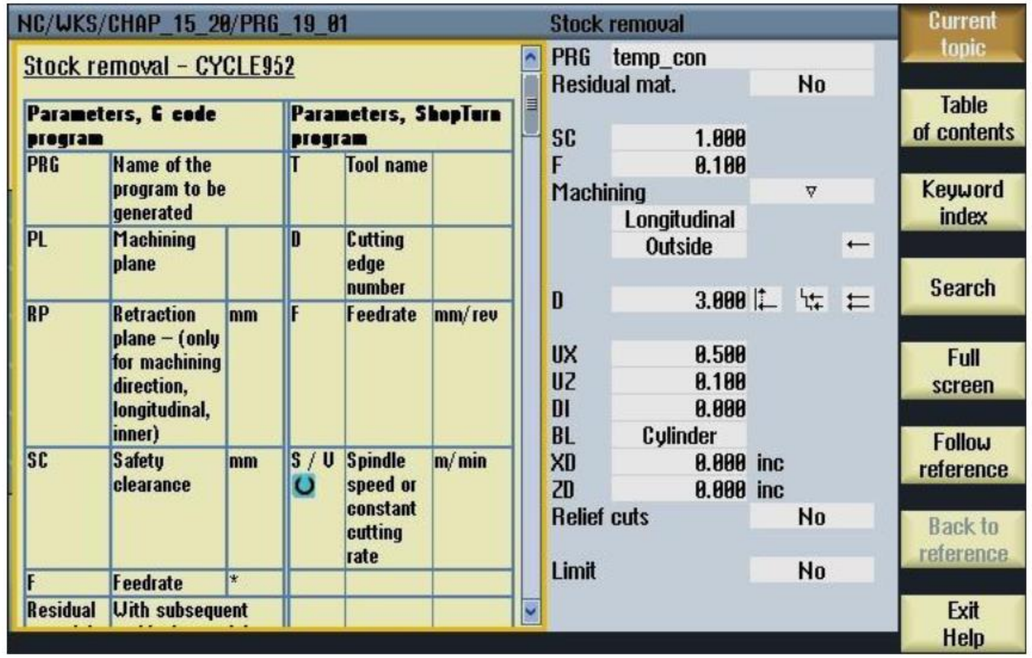

Fig. 131. Help window with description of cycle parameters

Fig. 132. Start menu for the insertion of the fixed working cycles

Fig. 133. Return to the EDIT menu to delete the cycles

	Horizontal softkey Cont. turn.
	Vertical softkey Contour.
	Vertical softkey Contour call.

Fig. 134. CYCLE62: procedure for the insertion of the cycle

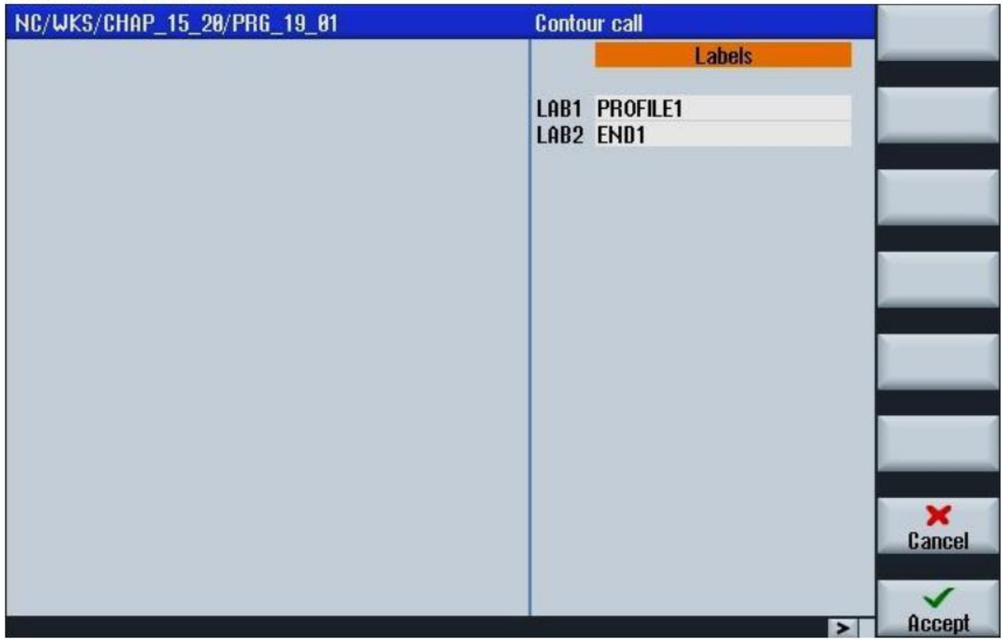

Fig. 135. CYCLE62: window for the insertion of the parameters

Parameter	Description
Labels	Select this option with the SELECT button; the profile is programmed in the main program; the beginning and the end of the block sequence is defined by the use of two labels.
LAB1	Name of the label for profile start (e.g. PROFILE1).
LAB2	Name of the label for profile end (e.g. END1).

Fig. 136. CYCLE62: label option

Parameter	Description
Subprogram	Select this option with the SELECT button; the profile is programmed in a subprogram located in the workpiece directory or in the SUBPROGRAMS folder.
PRG	Name of the subprogram containing the profile (example for the name of the subprogram PROFILE1.SPF).

Fig. 137. CYCLE62: subprogram option

Parameter	Description
Labels in sub-program	Select this option with the SELECT button; the profile is programmed in a subprogram and limited by two labels for the beginning and the end.
PRG	Name of the subprogram containing the profile.
LAB1	Name of the label for profile start.
LAB2	Name of the label for profile end.

Fig. 138. CYCLE62: label in subprogram option

Parameter	Description
Contour name	Select this option with the SELECT button; the profile is defined by means of the graphic profile generator.
CON	Name of the saved contour.

Fig. 139. CYCLE62: profile name option

Fig. 140. Graphic profile generator

Cont. turn.	Horizontal softkey Cont. turn.
Stock removal	Vertical softkey Stock removal.

Fig. 141. CYCLE952: procedure for the insertion of the cycle

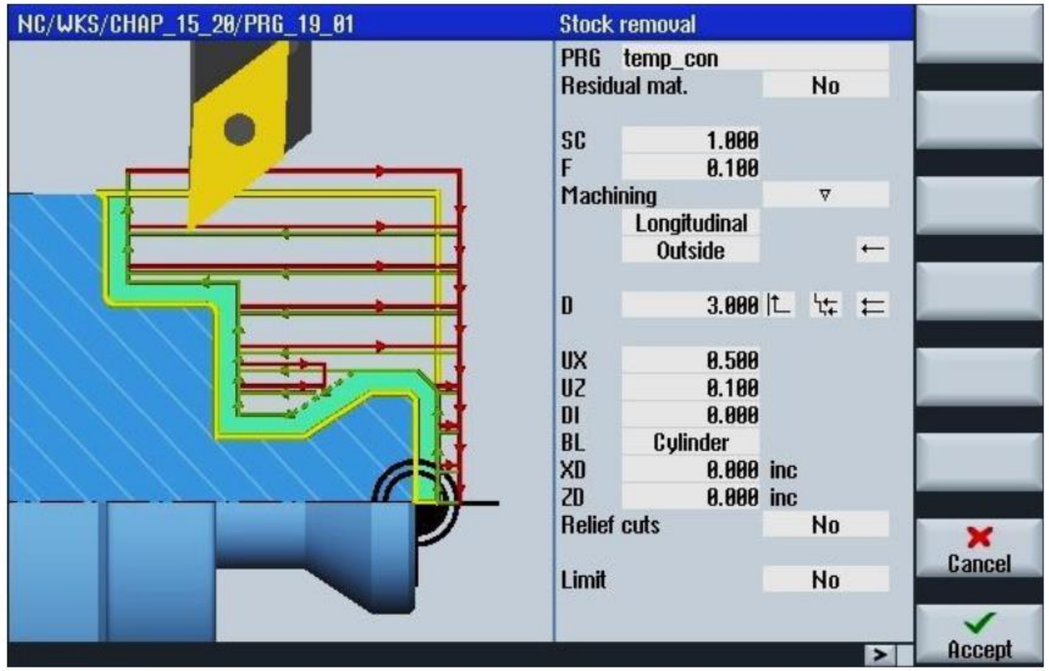

Fig. 142. CYCLE952: window for the insertion of the parameters

Parameter	Description
PRG	Name of the temporary program the cycle refers to in order to create and save the tool path. Various types of names can be used (e.g. temp_con, temporary contour).
SC	Safety distance for the approach of the tool used on the X-axis with diametral value and on the Z-axis with real value (example for a value: 1 mm).
F	Feedrate used by the tool during the roughing phase. The feedrate programmed in the finished profile of the workpiece is not taken into account in this case.

Machining	Type of tooling operation to carry out.
▽	Roughing of the workpiece (please select).
▽▽▽	Only finishing of the selected profile.
Longitudinal	For workpieces with proportions similar to a shaft.
Face	For workpieces with proportions similar to a flange.
Parallel to the contour	For workpieces already shaped as casting, molded parts or preworked parts.
Outside	For external profiles.
Inside	For internal profiles.
- RP	If internal, it expresses the return value in X.
← →	Inversion of the cutting direction. The NC checks if this selection is compatible with the position of the cutting edge.
D	Pass depth (if it has a radial value in X).

	Adapts the pass trajectories to the profile to be roughed and levels the shoulders, thereby guaranteeing the possibility to leave a constant machining allowance on the whole profile (recommended selection).
	Exclusively performs straight trajectories leaving a stepped surface even in the presence of cones.
	Adapts the pass direction to the trajectories of the profile to be roughed by executing them only when the angle between the cutting edge and the profile exceeds the value determined by the machine data.
	Refers the distribution of the passes to the edges of the profile while maintaining the pass depth as constant as possible (to be used when, due to problems with chip control, it is preferable not to execute passes of shallow depth).
	The pass always starts with the set cutting depth and then adapts to the edges of the workpiece (allows the pre-emptive calculation of the pass number necessary to carry out the roughing operation).
	Constant cutting direction (recommended choice).
	Inclined cutting direction (prevents the craterization of the insert).
UX	Allowance to be left on the X-axes with radial value.
UZ	Allowance to be left on the Z-axes.
DI	Cutting length in millimeters after which the tool moves back in order to break the chip. If the value is zero, a continuous pass without chip breaking movements will be carried out.

BL	Description of the distribution of the material to be removed. - Cylinder: material quantity to be removed beyond the cylinder defined by the end points of the profile. - Allowance: total quantity of material to be removed for shaped workpieces. - Contour: specific definition of the profile of rough material to be removed.
XD	Further quantity of rough material in X (used for blank parts turning eccentrically).
ZD	Further quantity of rough material in Z (used for non-orthogonal faces on the Z-axis).
Relief cuts	With the SELECT button, select: - YES in order to execute the tooling operation of the parts on the shadow side of the profile. - NO in order to rough the profile without taking into consideration the parts on the shadow side.
- FR	When selecting YES the cycle asks that a specific feedrate be entered for plunge cutting.
Limit	With the SELECT button, select: - YES in order to limit the material to be roughed in a certain area. - NO in order to remove all the material.
- XA - XB - ZA - ZB	When selecting YES the cycle asks that you enter the absolute coordinates limiting the area of the material to be removed.

Fig. 143. CYCLE952: list of cycle parameters

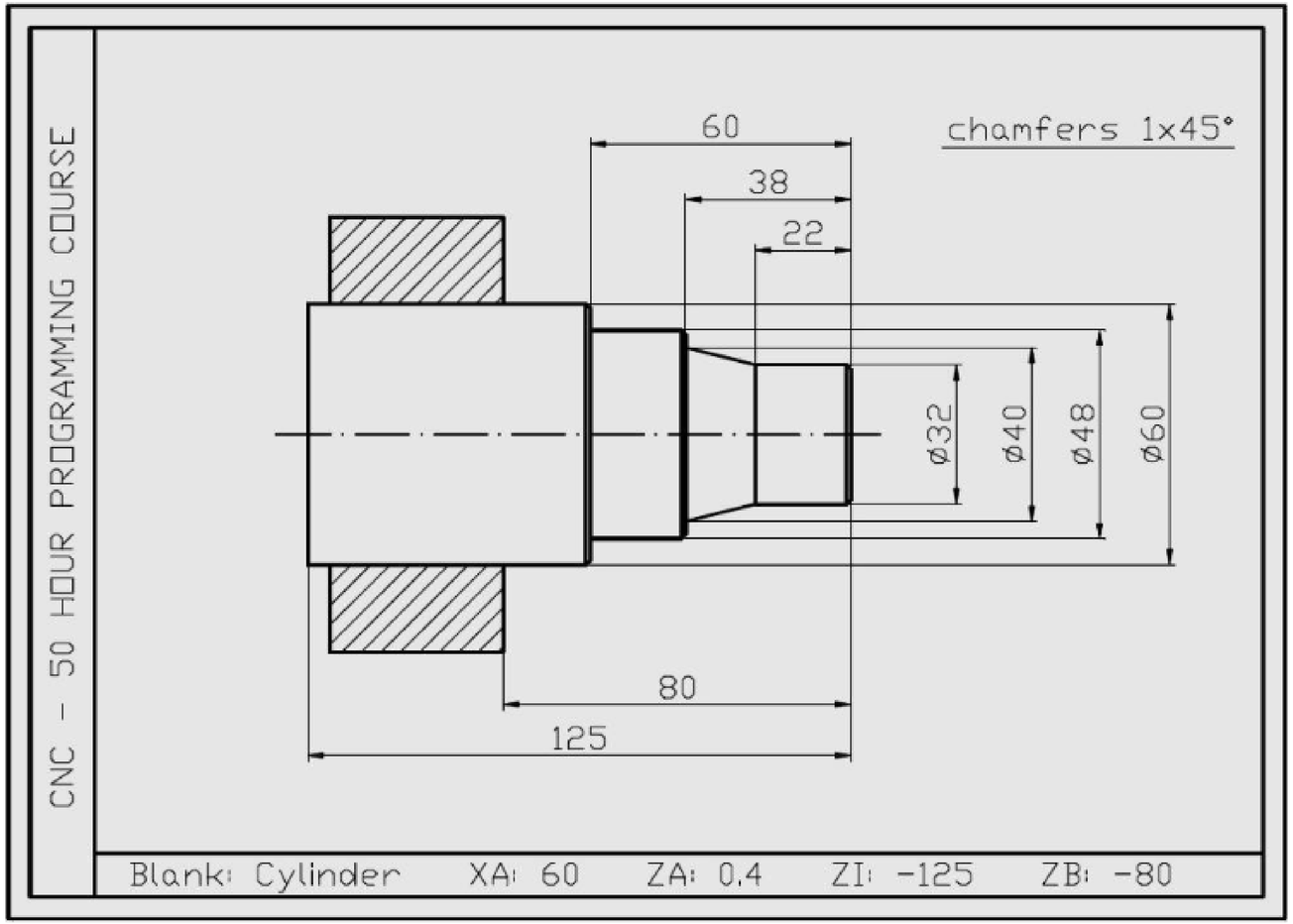

Fig. 144. External roughing of a workpiece with fixed cycle

Fig. 145. Internal roughing of a workpiece with fixed cycle

Turn-ing	Horizontal softkey Turning.
Thread	Vertical softkey Thread. The following options are shown: Thread long., Thread taper, Thread face, Thread chain.
Thread long.	Vertical softkey Thread long.

Fig. 146. CYCLE99: procedure for the insertion of the cycle

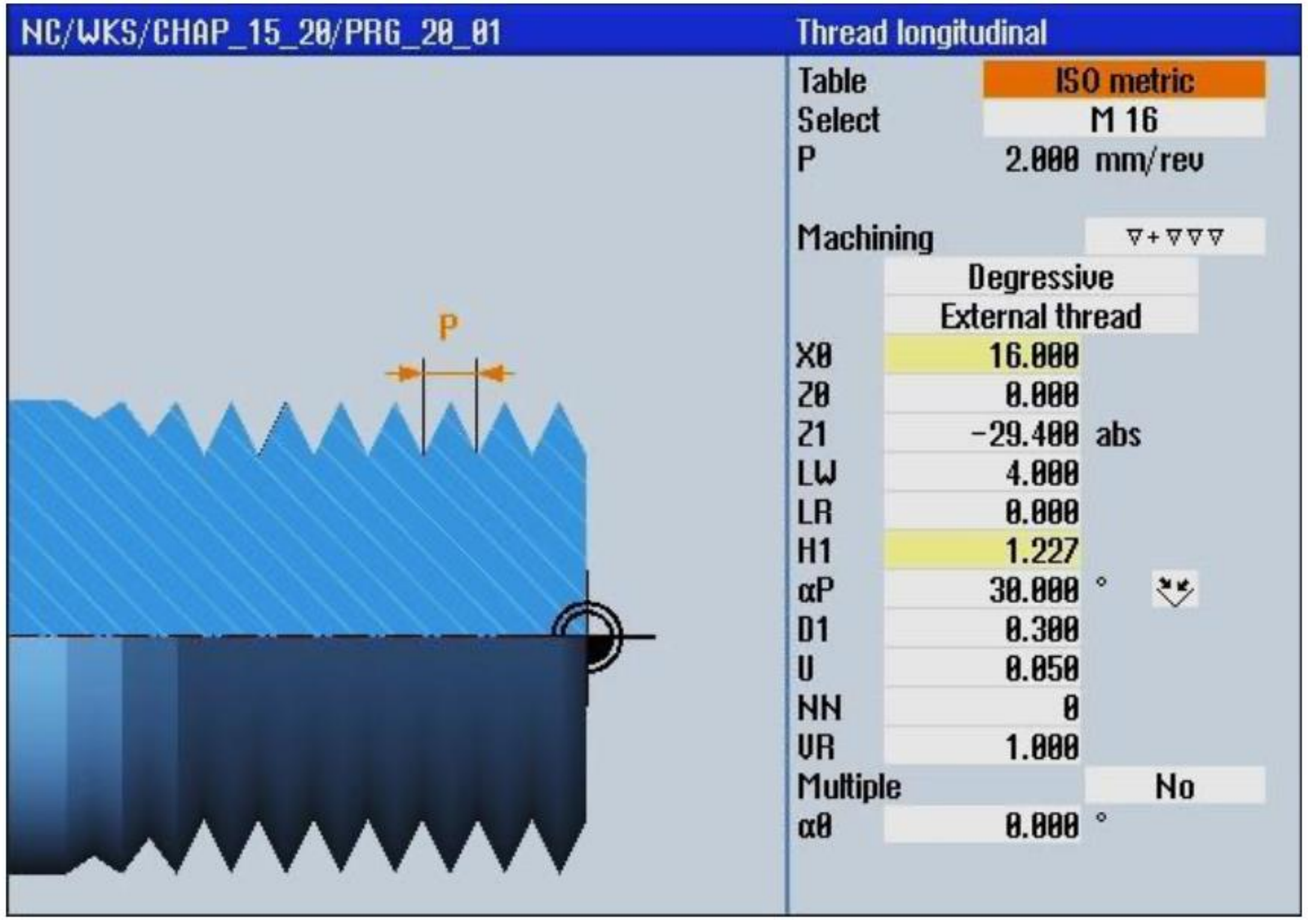

Fig. 147. CYCLE99: window for the insertion of the parameters

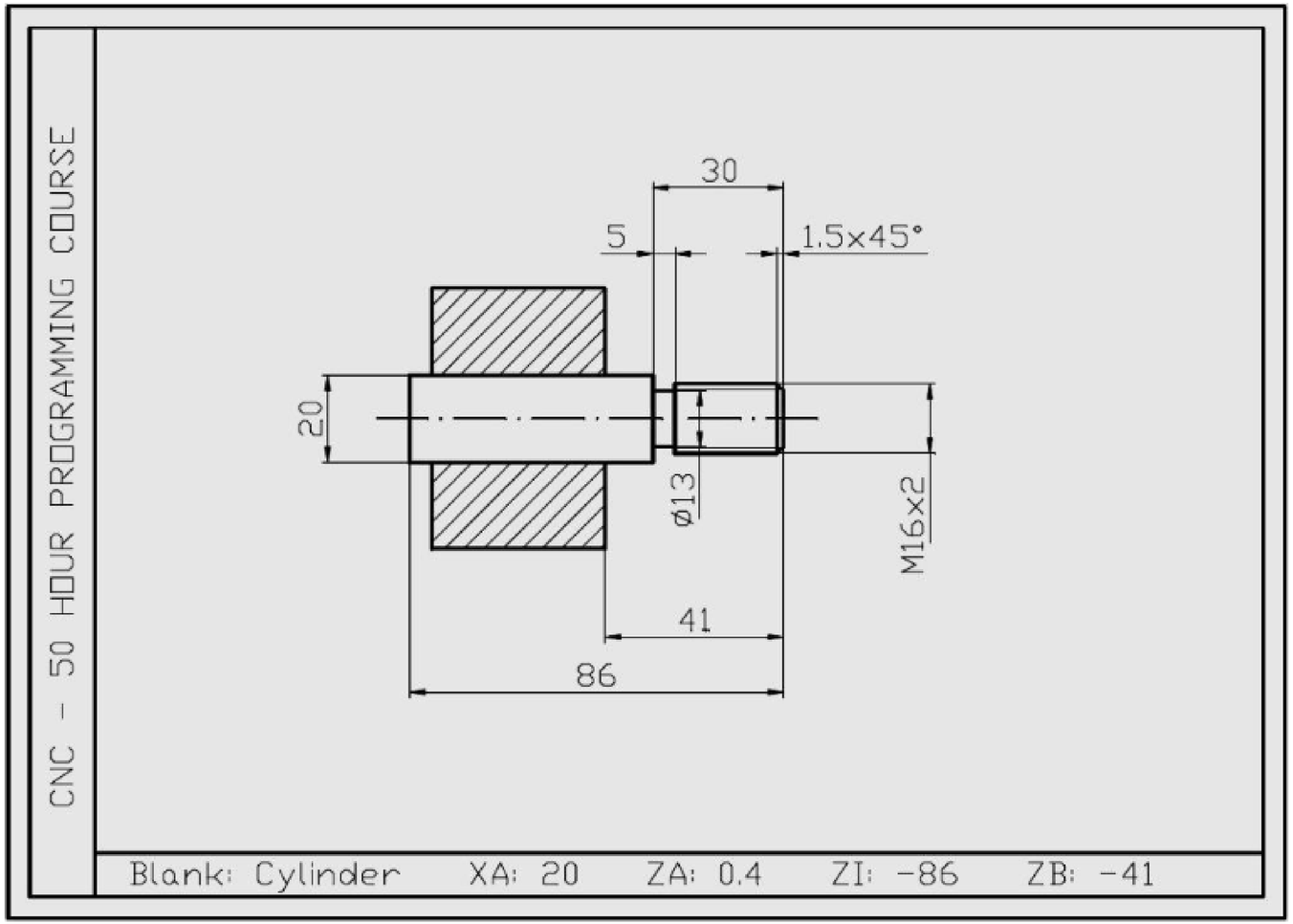

Fig. 148. Example of the programming of a threaded workpiece

1		ROUGHING TOOL	1	1	88.000	40.000	0.800	←	93.0	55	11.0
2											
3		OD GROOVING W.3MM	1	1	98.000	40.000	0.100		3.000		10.0
4											
5		CENTER DRILL D.6	1	1	100.000	24.000	6.000		118.0		
6											
7											
8											
9											
10											
11		AX. DRILL D.16	1	1	100.000	120.000	16.000		118.0		
12		ROUGH. BORING-BAR	1	1	86.000	92.000	0.400	←	93.0	55	8.0
13		FINISH. BORING-BAR	1	1	84.000	88.000	0.200	←	93.0	55	8.0
14		ID GROOV. W.3MM	1	1	92.000	75.000	0.100		3.000		8.0
15		ID THREADING	1	1	88.000	95.000	0.200				
16		AX. DRILL D.12	1	1	100.000	72.000	12.000		118.0		

Fig. 149. List of tools to be created and used in the test program

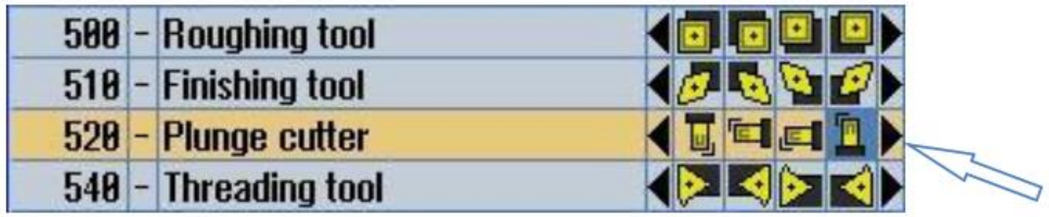

Fig. 150. Choice of the position of the cutting edge

Tooling sequence	Tool	Operation	Cutting speed (m/min)	Feedrate (mm/rev)
1 st	T1 D1	External profile	100	0.18
2 nd	T3 D1	External grooves	78	0.1
3 rd	T5 D1	Center drilling	80	0.07
4 th	T16 D1	Hole D12	60	0.1
5 th	T12 D1	Int. roughing	70	-
6 th	T13 D1	Int. finishing	90	-
7 th	T14 D1	Int. groove	60	-
8 th	T15 D1	Int. threading	60	-

Fig. 151. Sequence of tooling operations and cutting parameters to use for the test

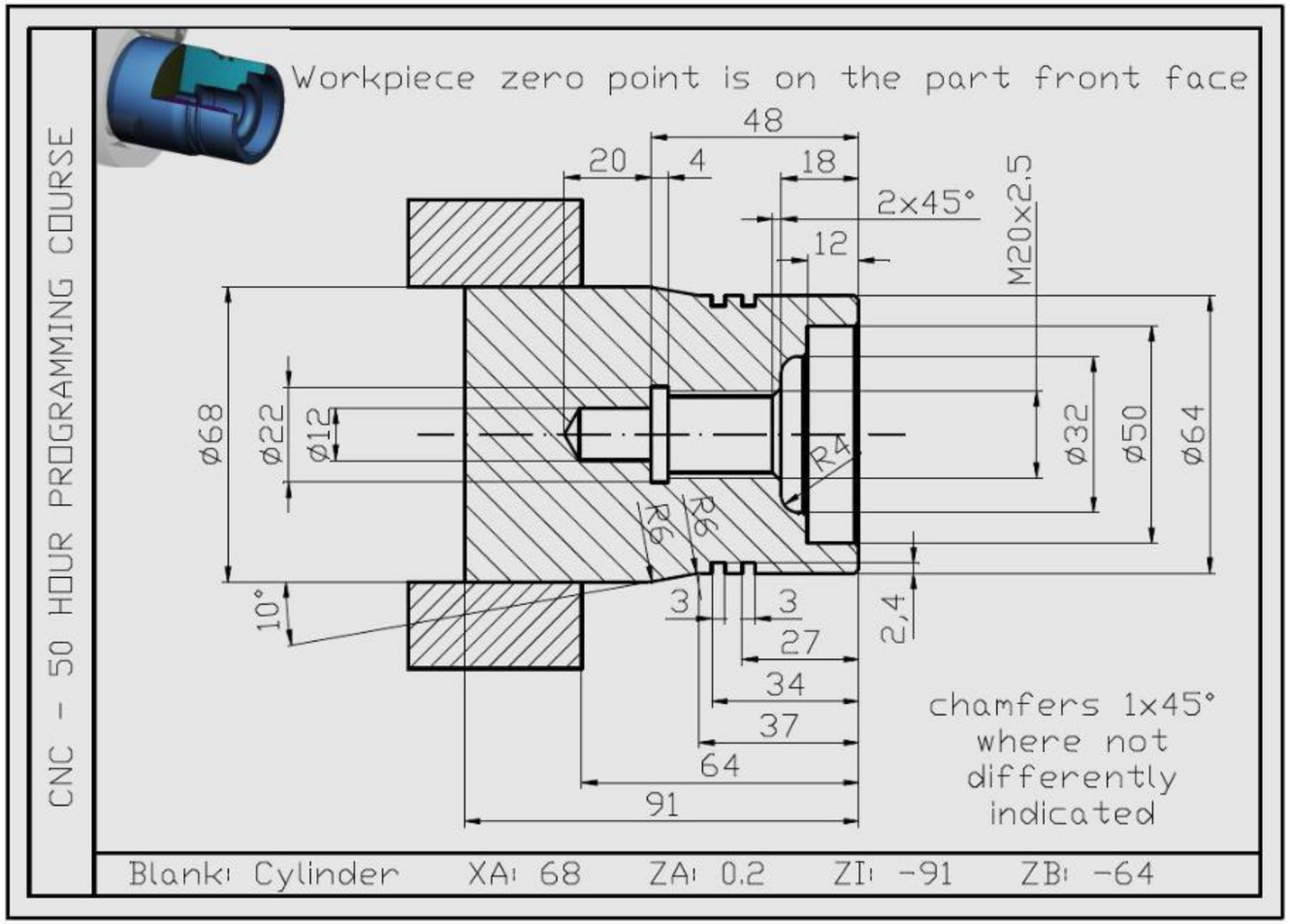

Fig. 152. Drawing of the part to be created

	Horizontal softkey Turning.
	Vertical softkey Groove. The following options are shown: - Groove with straight walls without chamfers and/or radii on the edges. - Groove with possible straight walls with chamfers and/or radii on the edges. - Groove on conical diameter.
	Choose the second option.

Fig. 153. CYCLE930: procedure for the insertion of the cycle

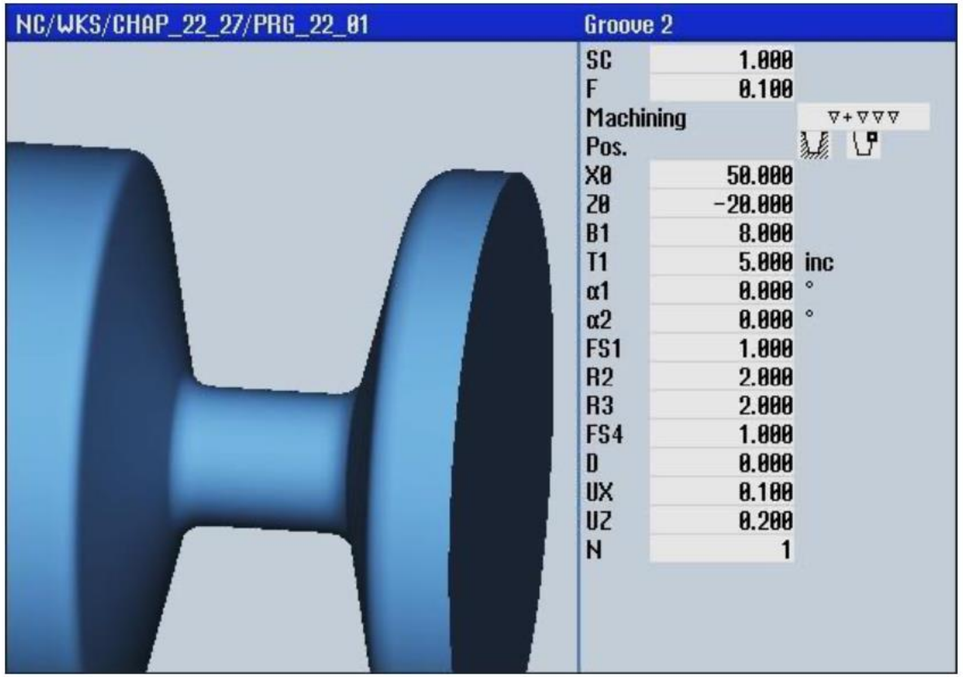

Fig. 154. CYCLE930: window for the insertion of the parameters

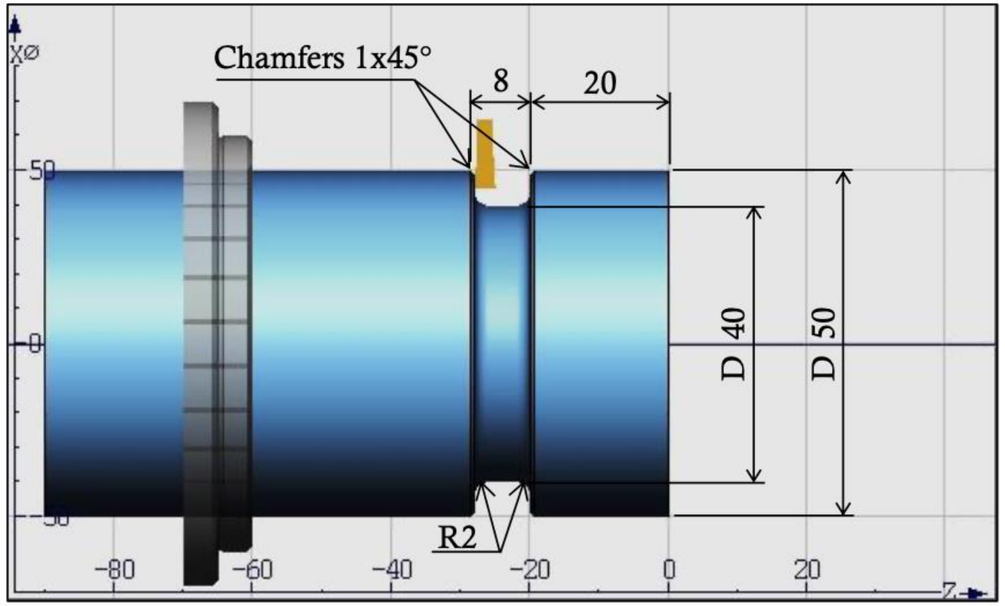

Fig. 155. Programming example with the use of the groove cycle

	Horizontal softkey Drilling.
	Vertical softkey Drilling Reaming The reaming cycle is similar to the drilling cycle, but it has the additional option to set a working feedrate to get into the hole and a faster rate to exit from the hole.
	Select Drilling.

Fig. 156. CYCLE82: procedure for the insertion of the cycle

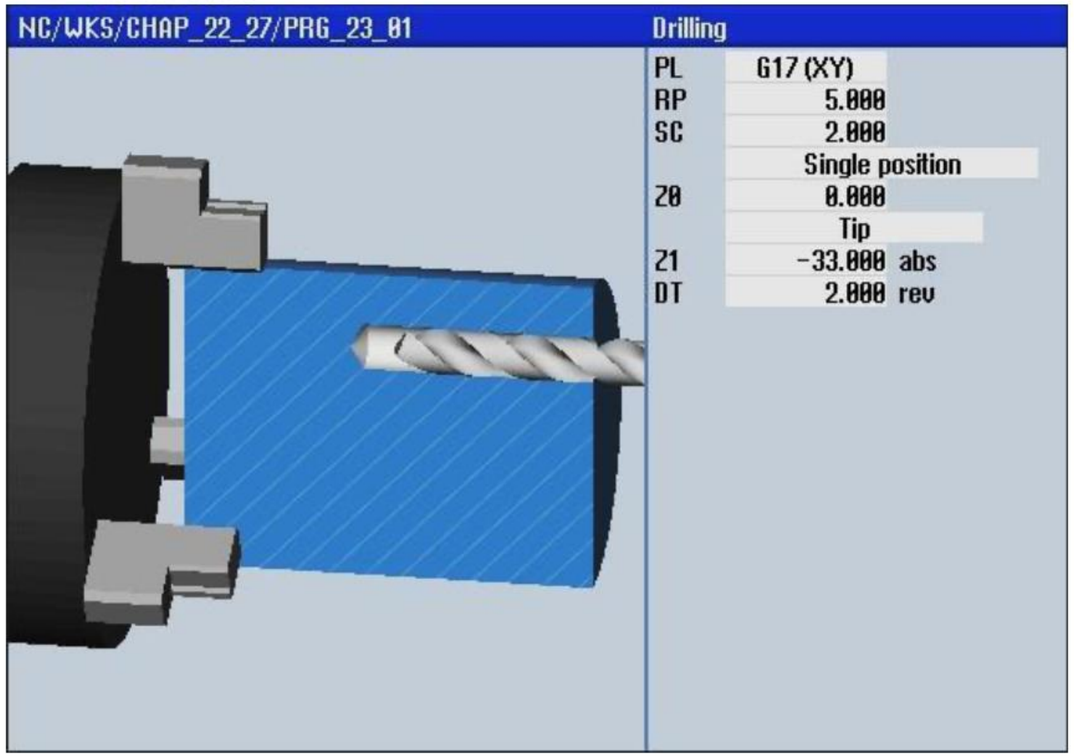

Fig. 157. CYCLE82: window for the insertion of the parameters

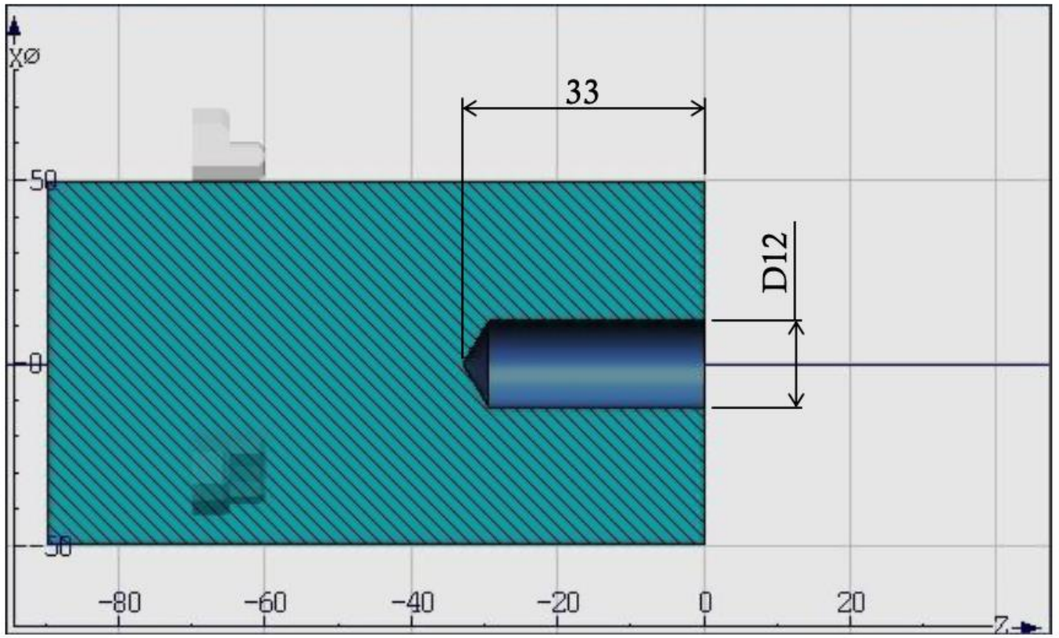

Fig. 158. Example of the programming of an axially drilled workpiece

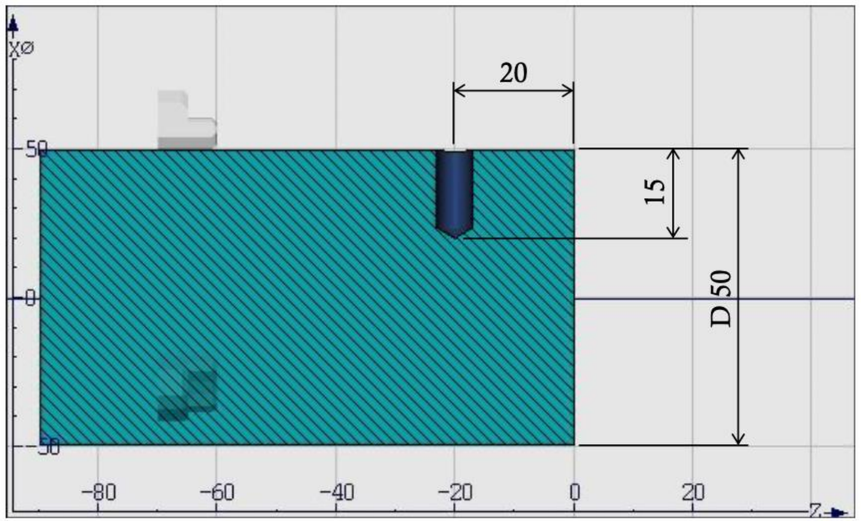

Fig. 159. Example of the programming of a radially drilled workpiece

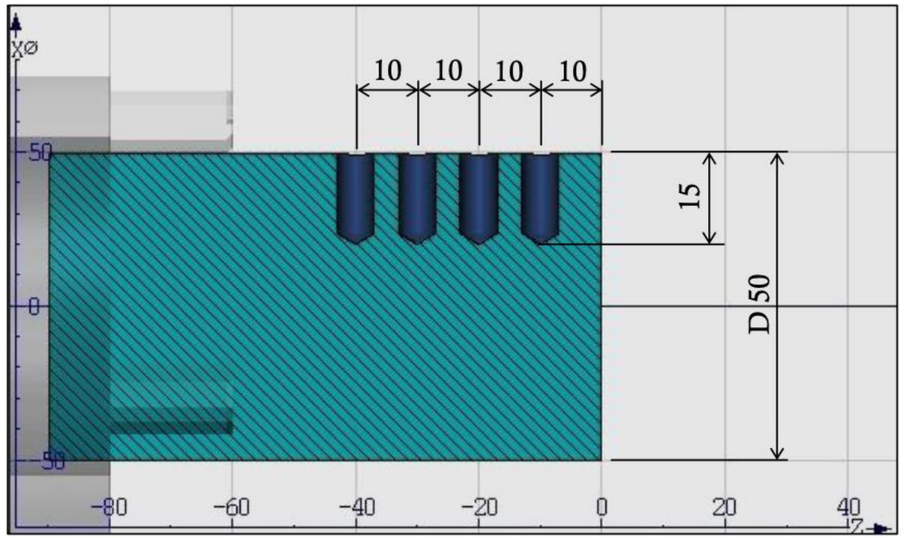

Fig. 160. Programming example with modal activation of the cycle

	Horizontal softkey Drilling.
	Vertical softkey Deep hole drilling.

Fig. 161. CYCLE83: procedure for the insertion of the cycle

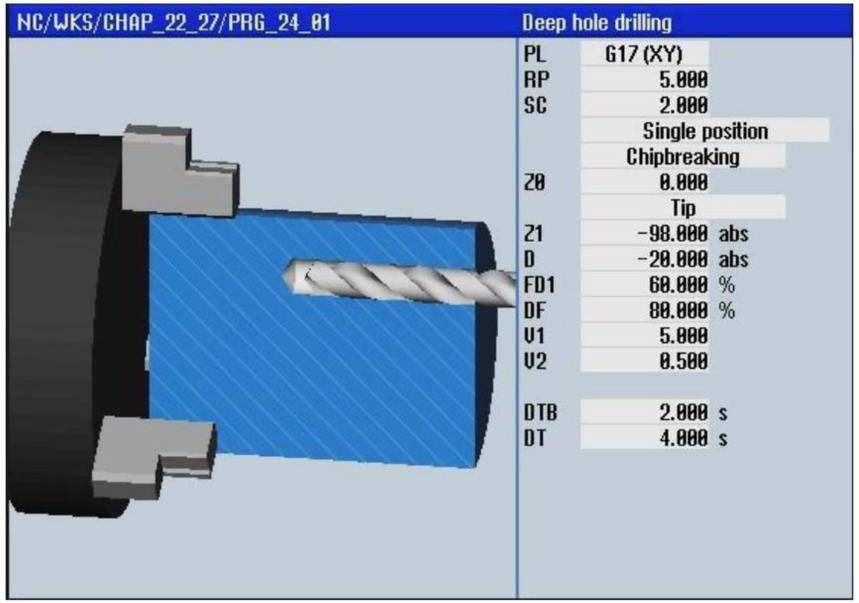

Fig. 162. CYCLE83: window for the insertion of the parameters

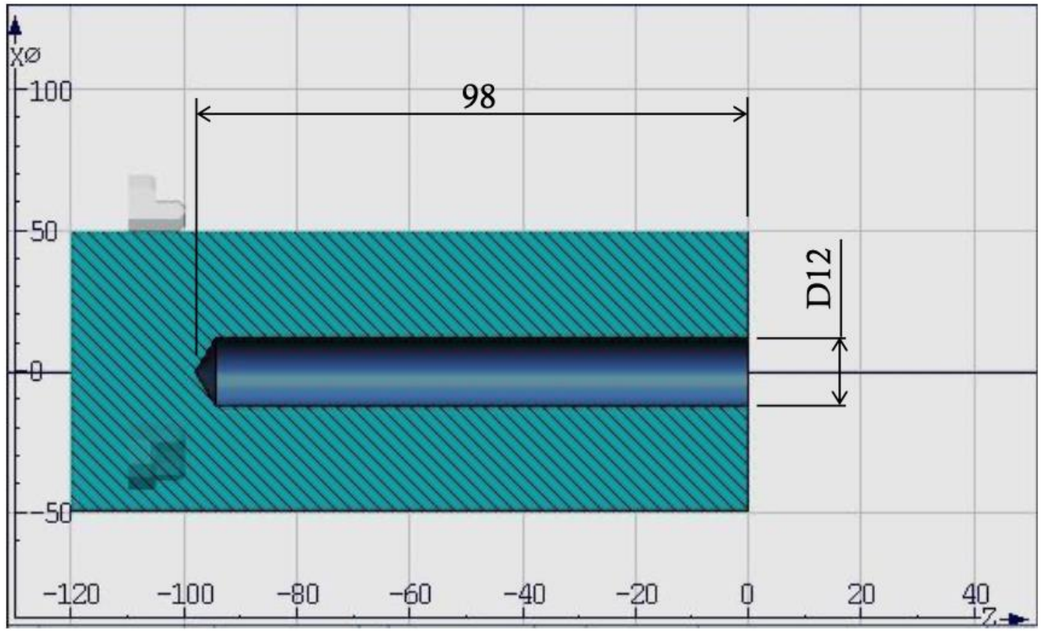

Fig. 163. Example of the programming of a drilled workpiece

	Horizontal softkey Drilling.
	Vertical softkey Thread.
	Vertical softkey Tapping.

Fig. 164. CYCLE84/840: procedure for the insertion of the cycle

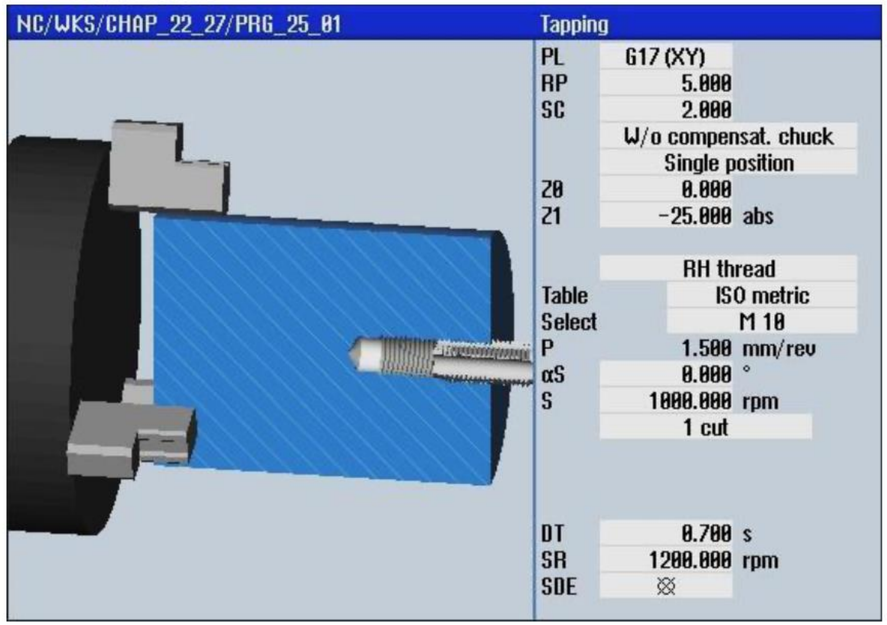

Fig. 165. CYCLE84/840: window for the insertion of the parameters

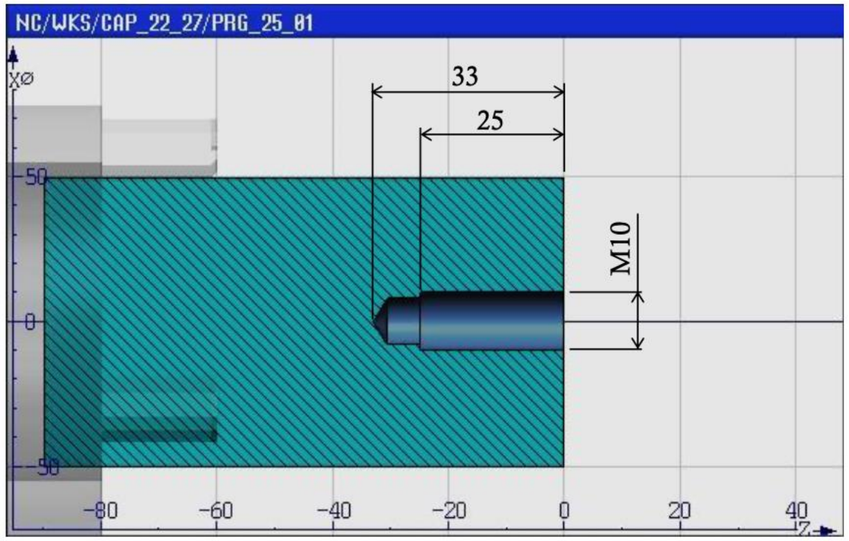

Fig. 166. Example of the programming of an axial tapping

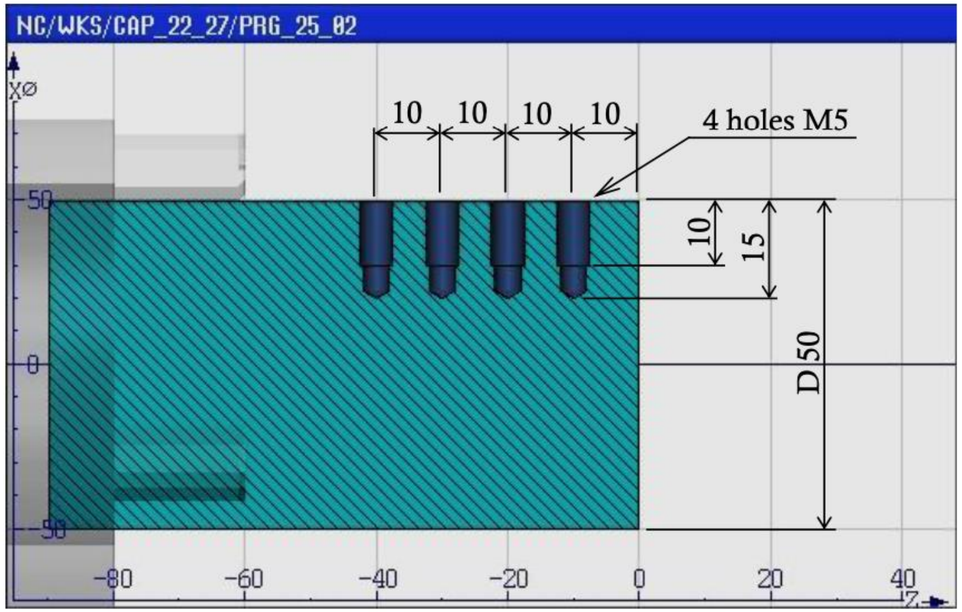

Fig. 167. Example of the programming of a radial tapping

Turn-ing	Horizontal softkey Turning.
Undercut	Vertical softkey Undercut.
Undercut thread	Vertical softkey Undercut thread.

Fig. 168. CYCLE940: procedure for the insertion of the cycle

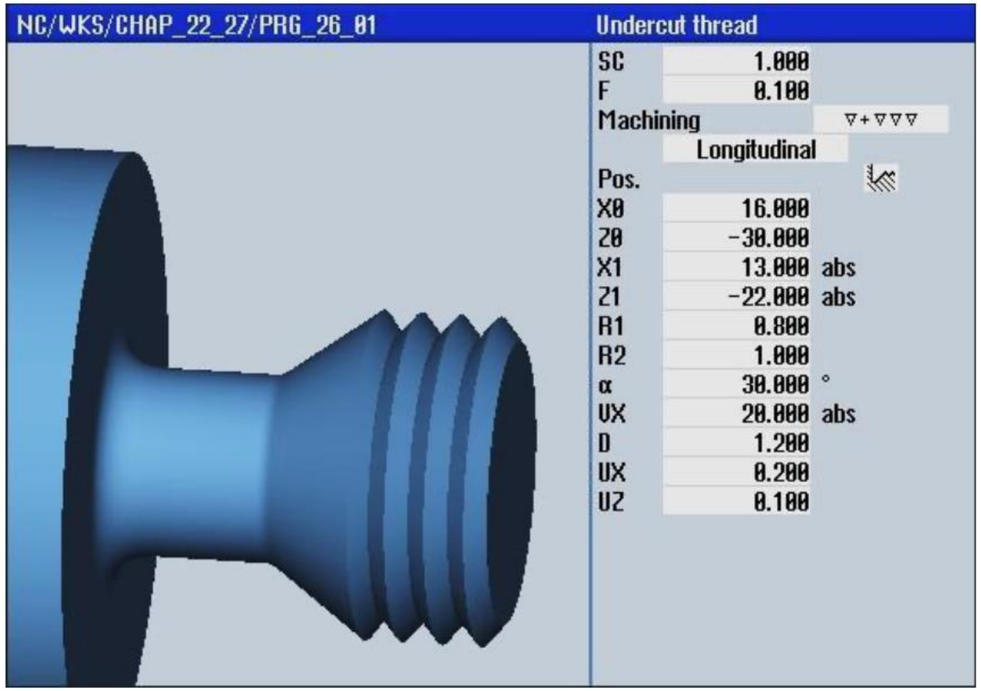

Fig. 169. CYCLE940: window for the insertion of the parameters

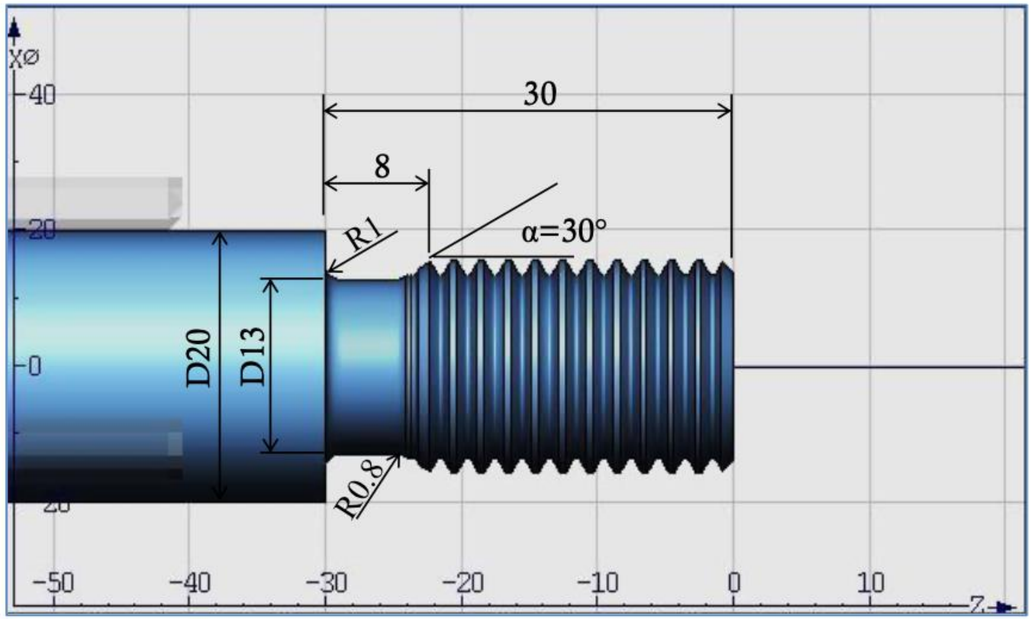

Fig. 170. Example of the programming of a thread undercut

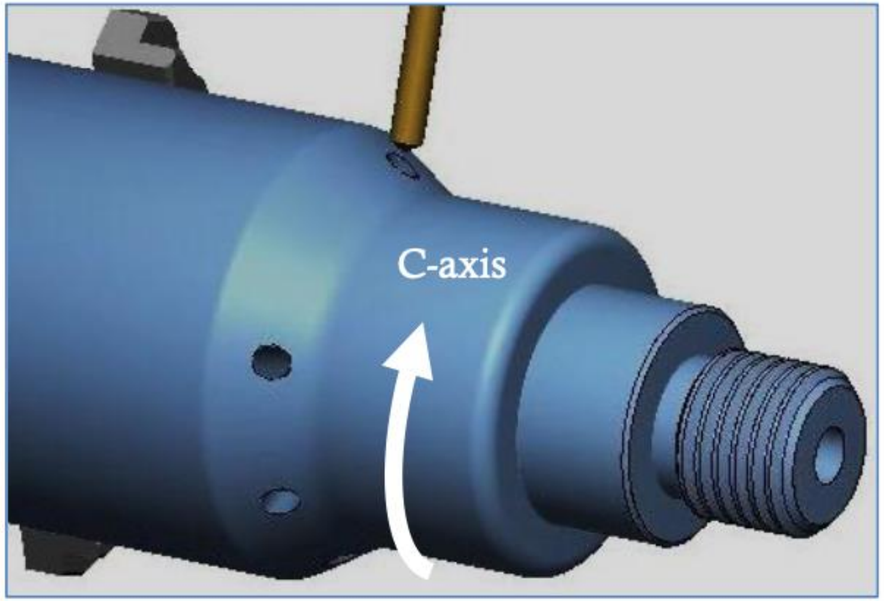

Fig. 171. Angular orientation of the spindle for the creation of radial holes

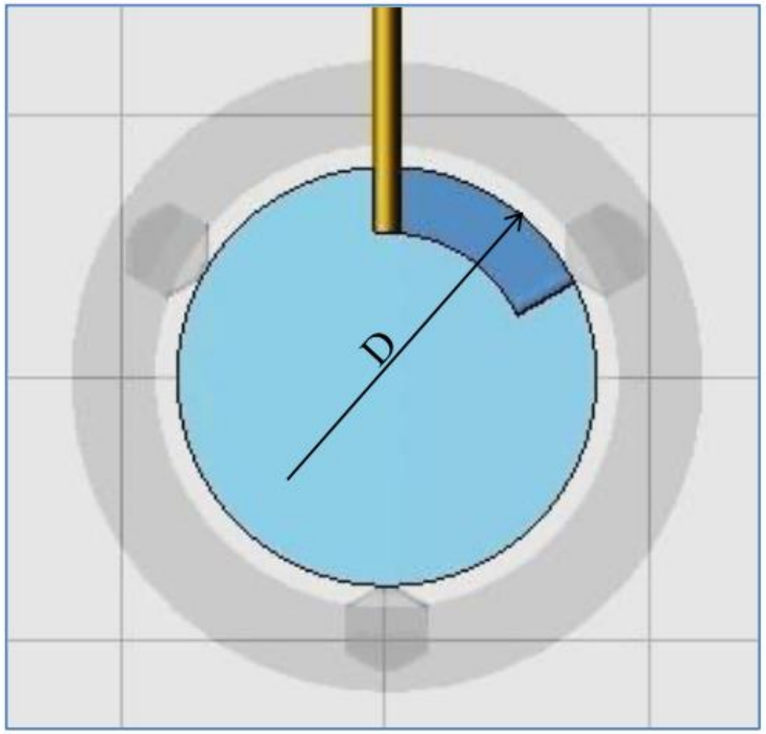

Fig. 172. Calculation of the feedrate expressed in degrees

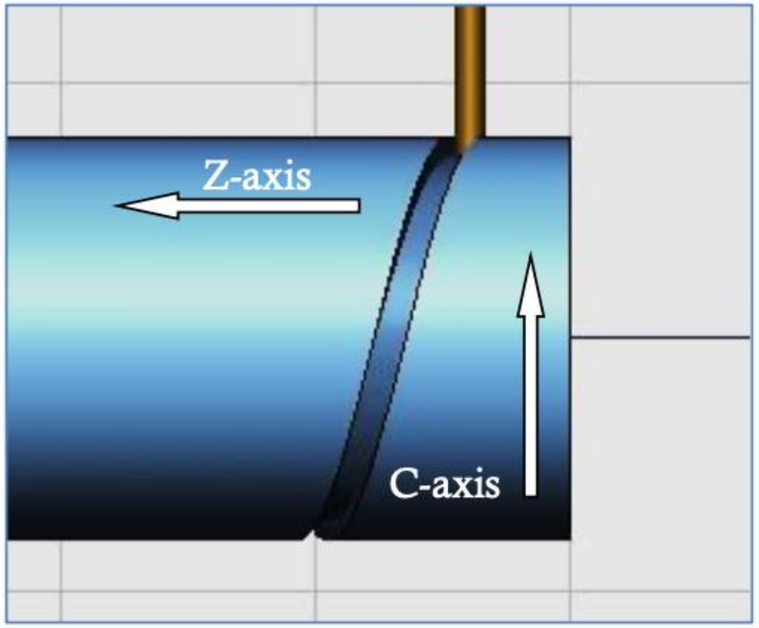

Fig. 173. Calculation of the feedrate in simple cylindrical interpolation C-Z

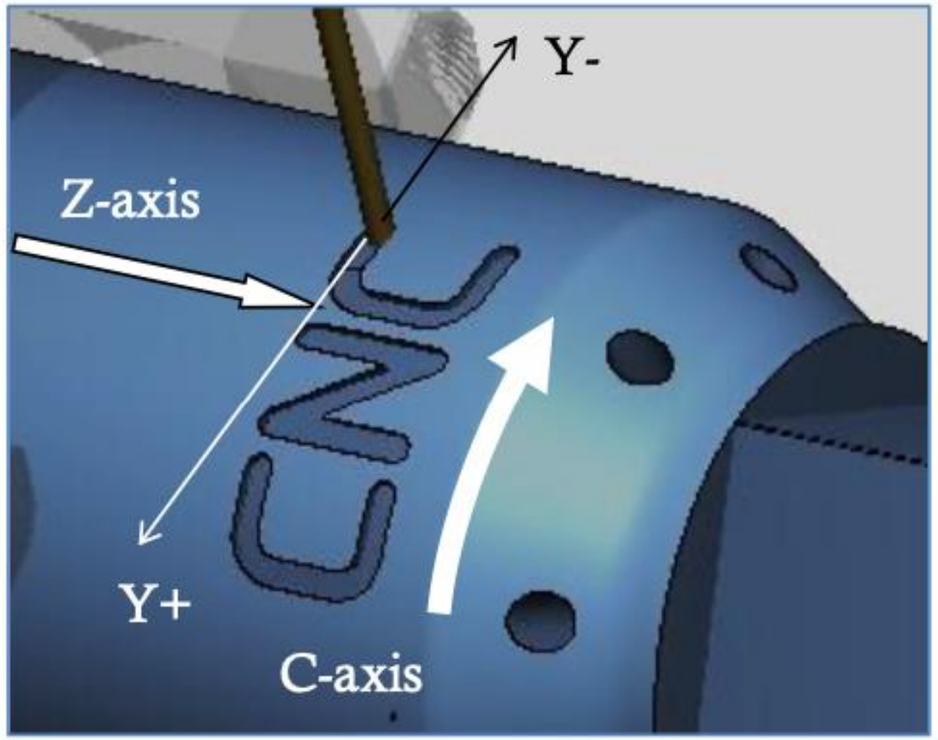

Fig. 174. Interpolation example with TRACYL

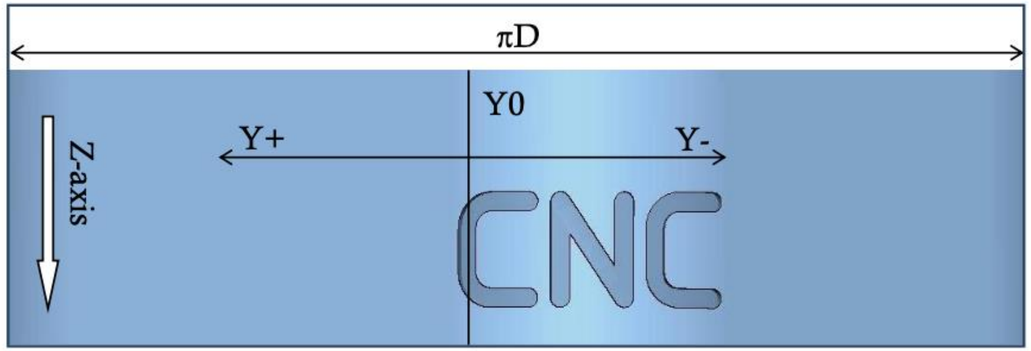

Fig. 175. Circumference on the reference diameter 'D'

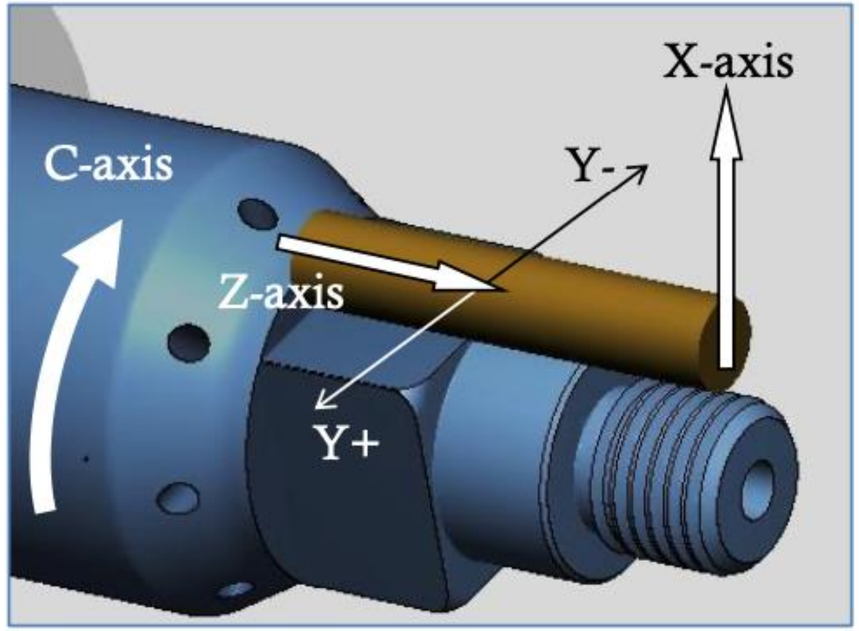

Fig. 176. Example of a frontal interpolation with TRANSMIT

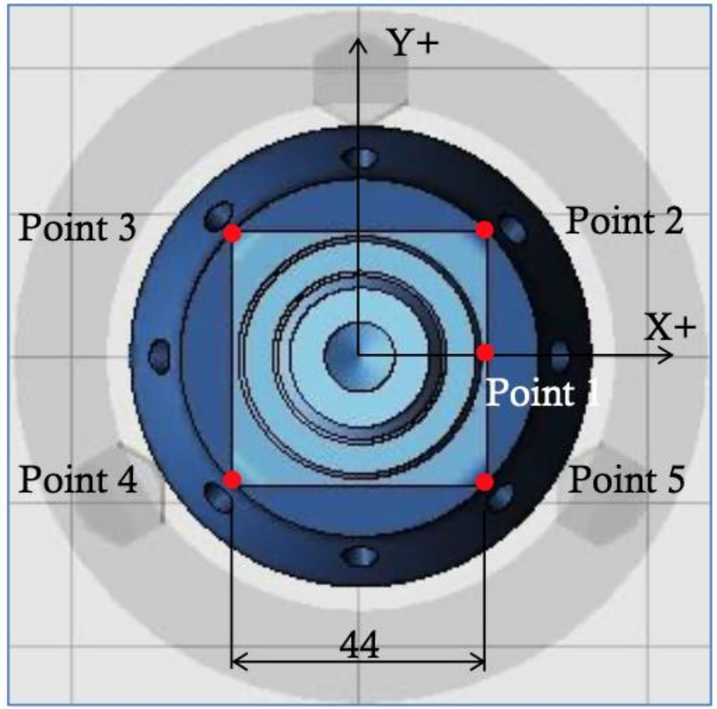

Fig. 177. Position of the virtual system of Cartesian axes Y-X

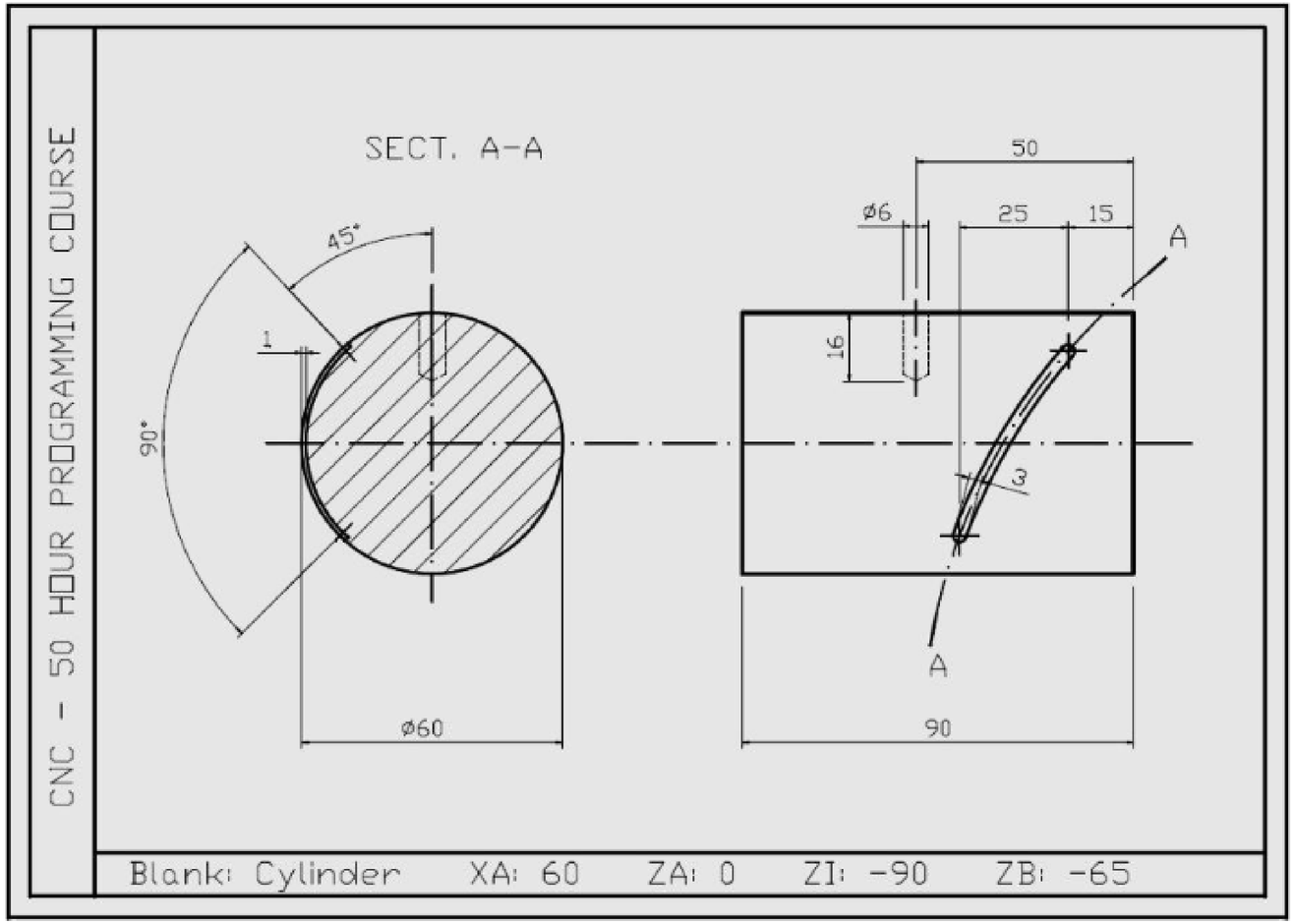

Fig. 178. Example of the programming of a simple interpolation Z-C

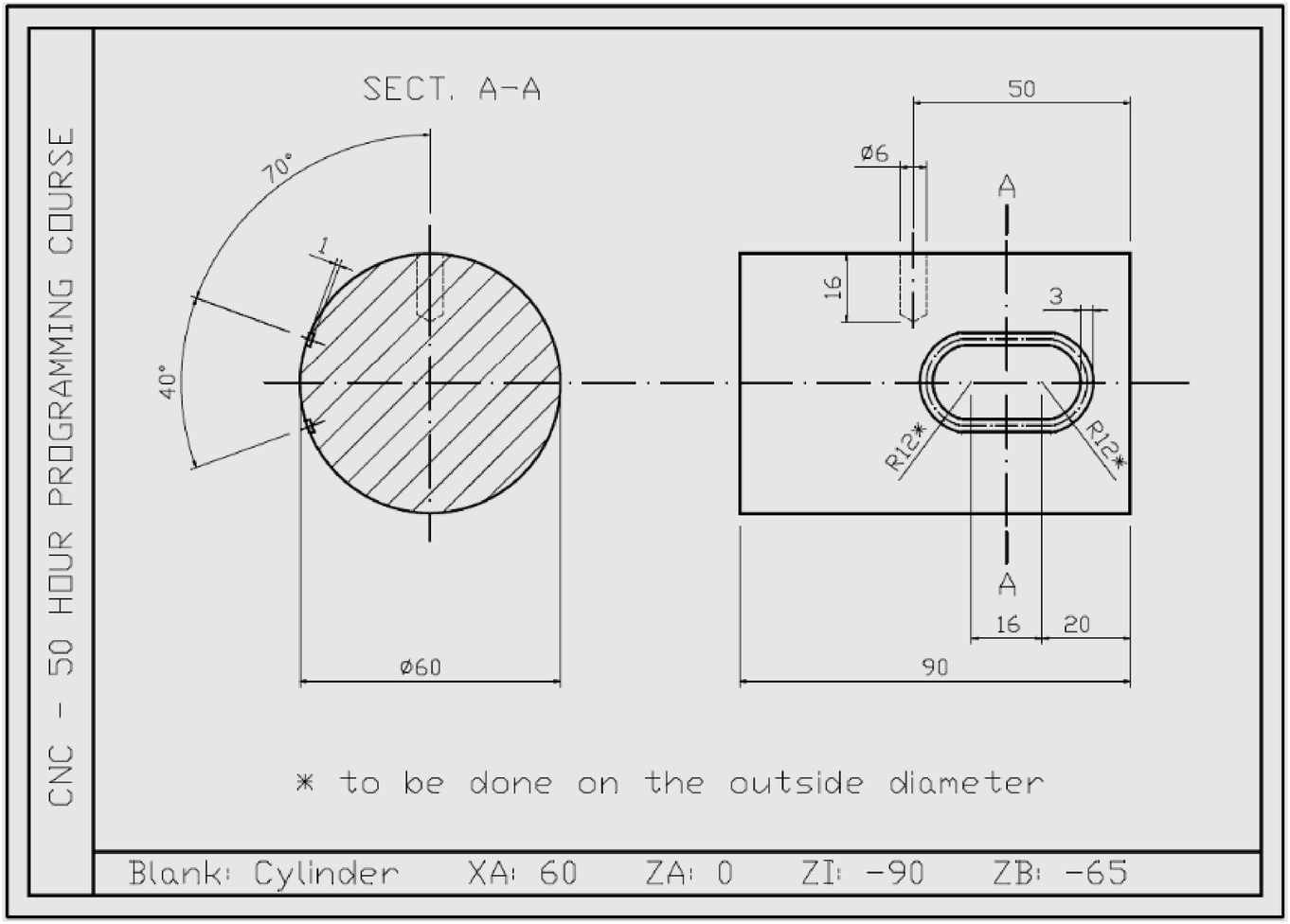

Fig. 179. Cylindrical interpolation with TRACYL

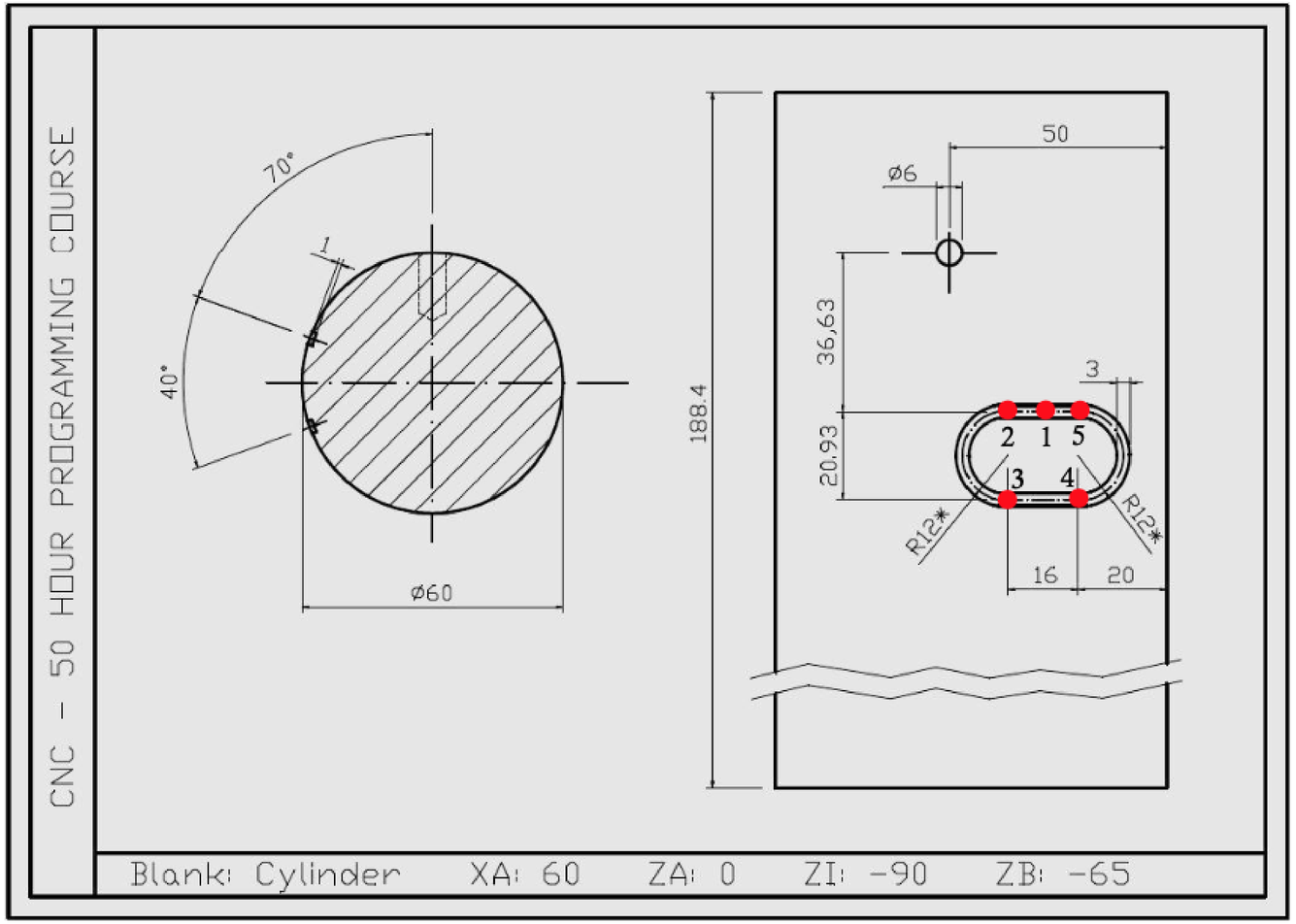

Fig. 180. Interpolation plane after TRACYL activation (reference diameter 60 mm)

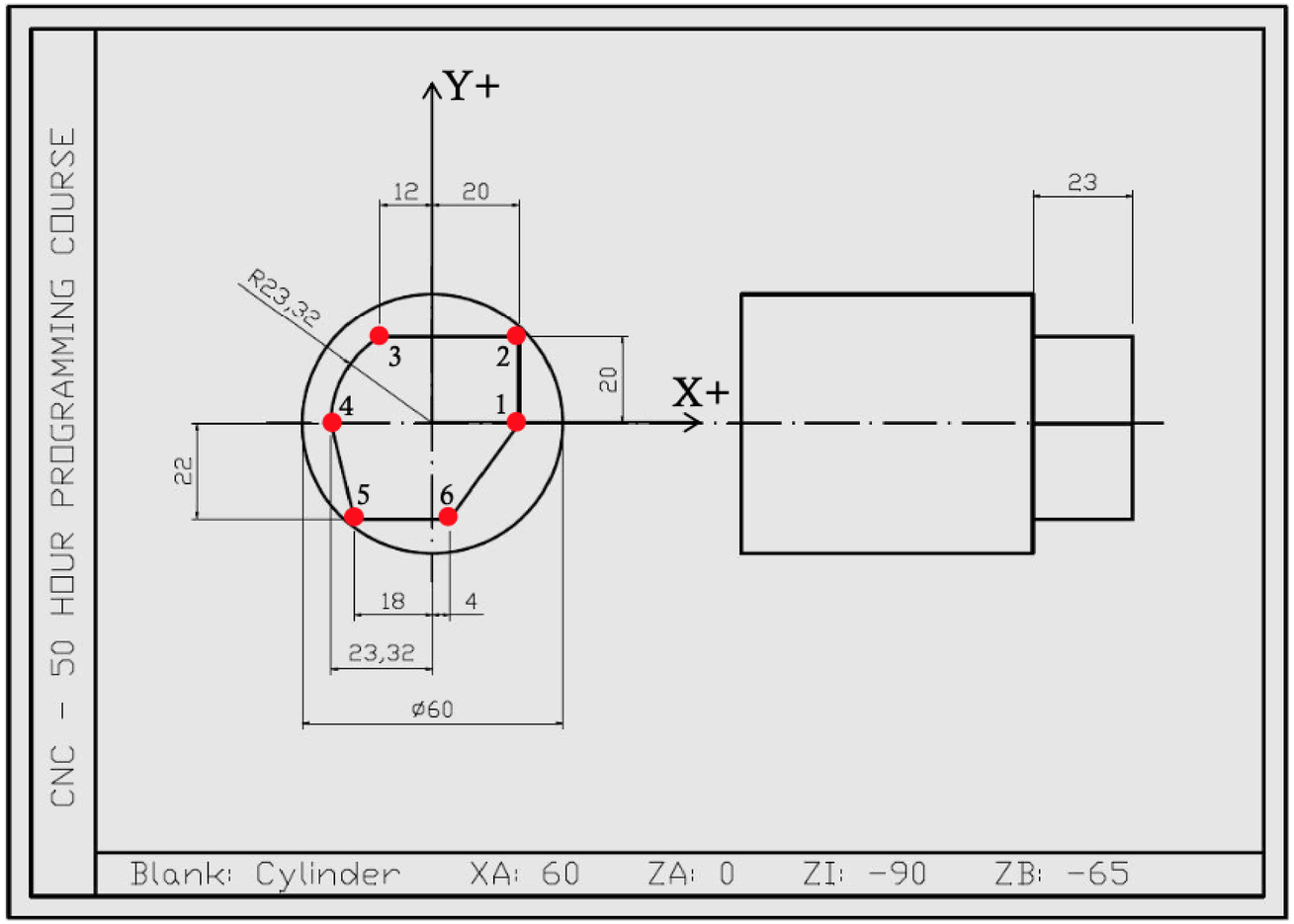

Fig. 181. Frontal interpolation with TRANSMIT

CNC - 50 HOUR PROGRAMMING COURSE

Tooling sequence	Tool	Operation	Cutting speed (m/min)	Feedrate (mm/rev)
Tooling operation no. 1: use the roughing cycle				
1st	T1 D1	External roughing	100	0.18
Tooling operation no. 2: program the finished profile by using ISO codes				
2nd	T2 D1	External finishing	120	0.12

Tooling sequence	Tool	Operation	Cutting speed (m/min)	Feedrate (mm/rev)
Tooling operation no. 3: use the cycle for undercuts, define the insert angle at 35°				
3rd	T2 D1	Undercut	100	0.12
Tooling operation no. 4: use the threading cycle				
4th	T4 D1	Threading M36x4	60	-
Tooling operation no. 5: use the ISO codes, execute center drilling up to Z-4				
5th	T5 D1	Center drilling	80	0.08
Tooling operation no. 6: use the drilling cycle				
6th	T6 D1	Hole D8.5	80	0.1
Tooling operation no. 7: use the rigid tapping cycle				
7th	T7 D1	Tap M10	40	-
Tooling operation no. 8: use the function M70, calculate the feedrate in degrees per revolution				
8th	T10 D1	Milling on circumference	35	0.06
Tooling operation no. 9: use the TRANSMIT function				
9th	T9D1	Frontal milling	80	0.1

Fig. 182. Sequence of tooling operations and cutting parameters to use for the test

CNC - 50 HOUR PROGRAMMING COURSE

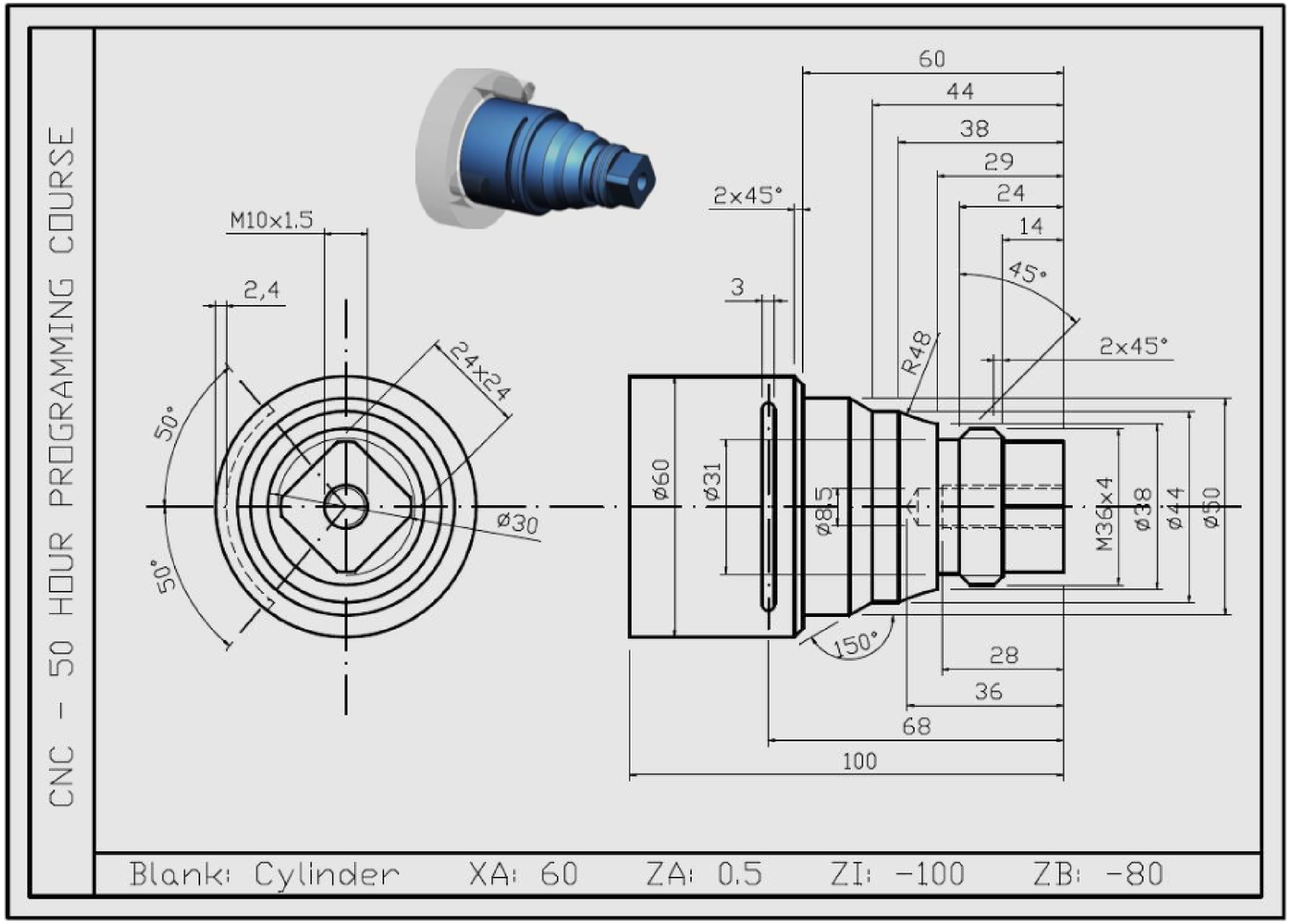

Fig. 183. Drawing of the part to be created

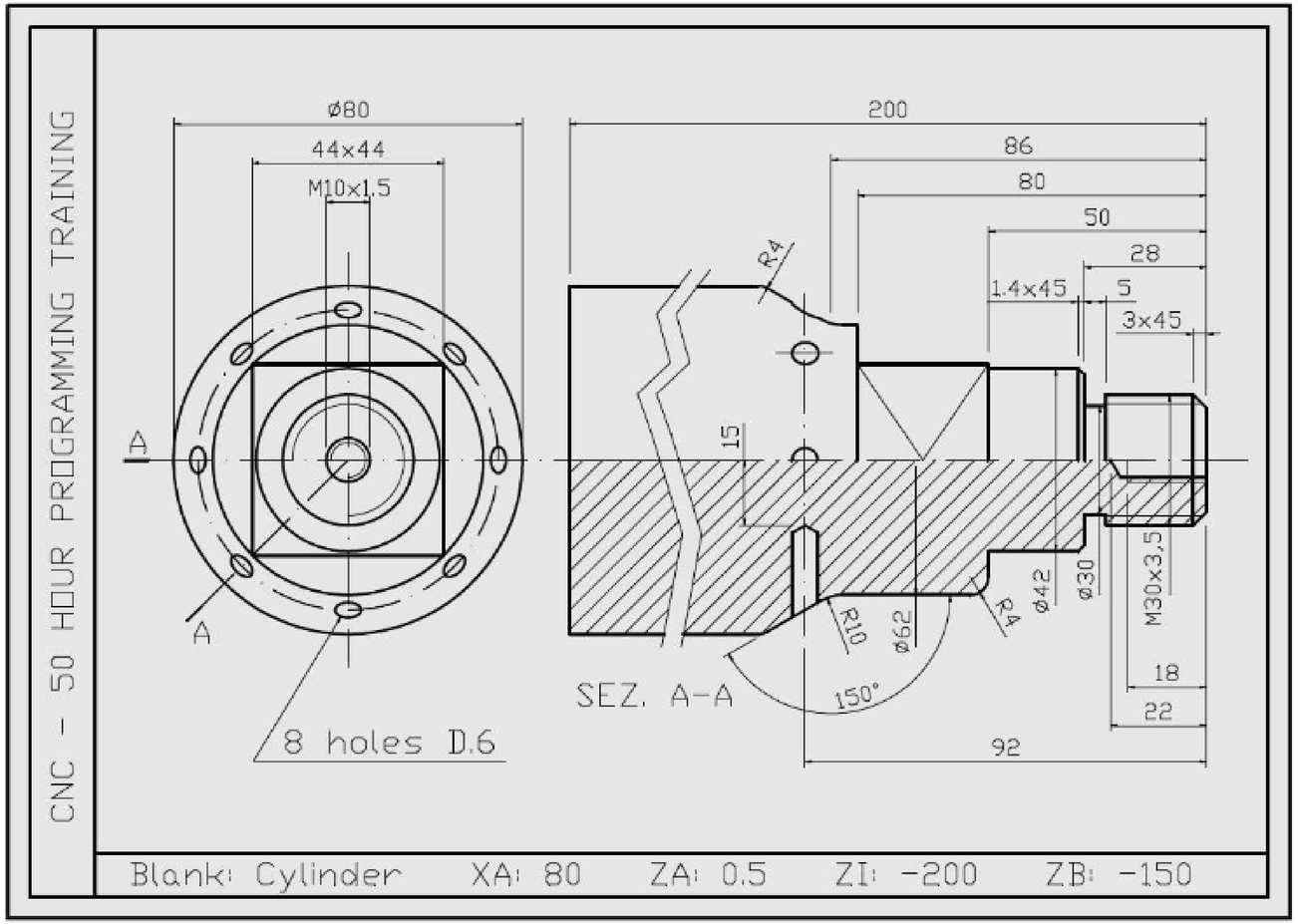

Fig. 184. Part created by the support program for the 3rd test

1 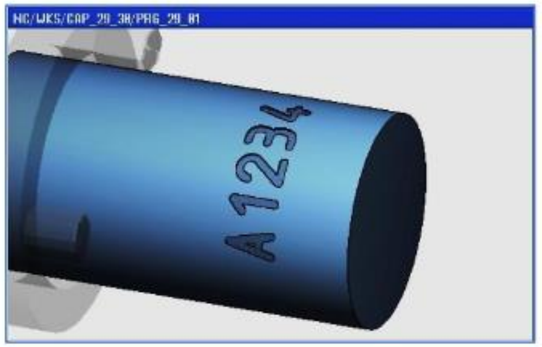

2

Fig. 185. 1: engraving on plane G19, 2: engraving on plane G17

	Horizontal softkey Milling.
	Vertical softkey Engraving.

Fig. 186. CYCLE60: procedure for the insertion of the cycle

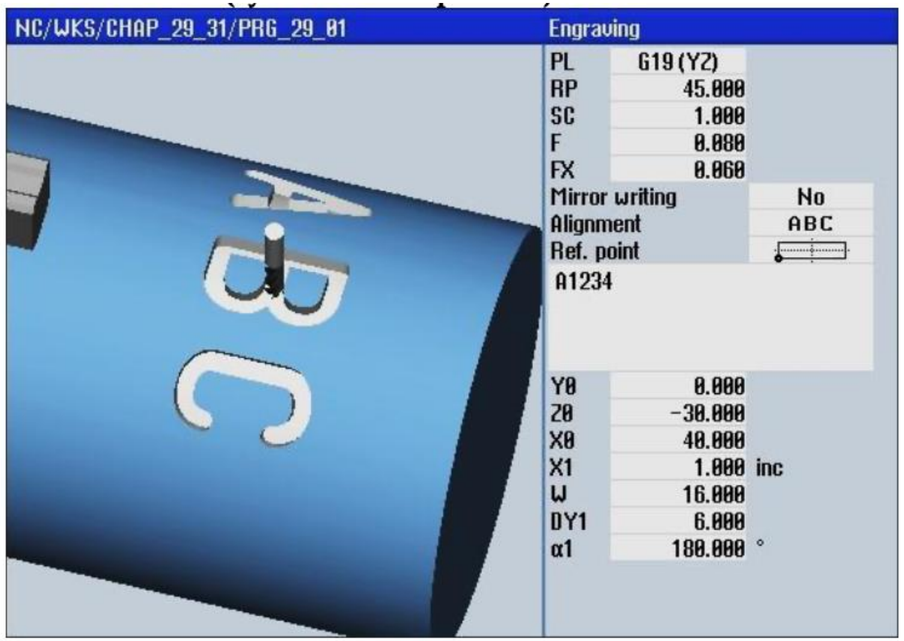

Fig. 187. CYCLE60: window for the insertion of the parameters

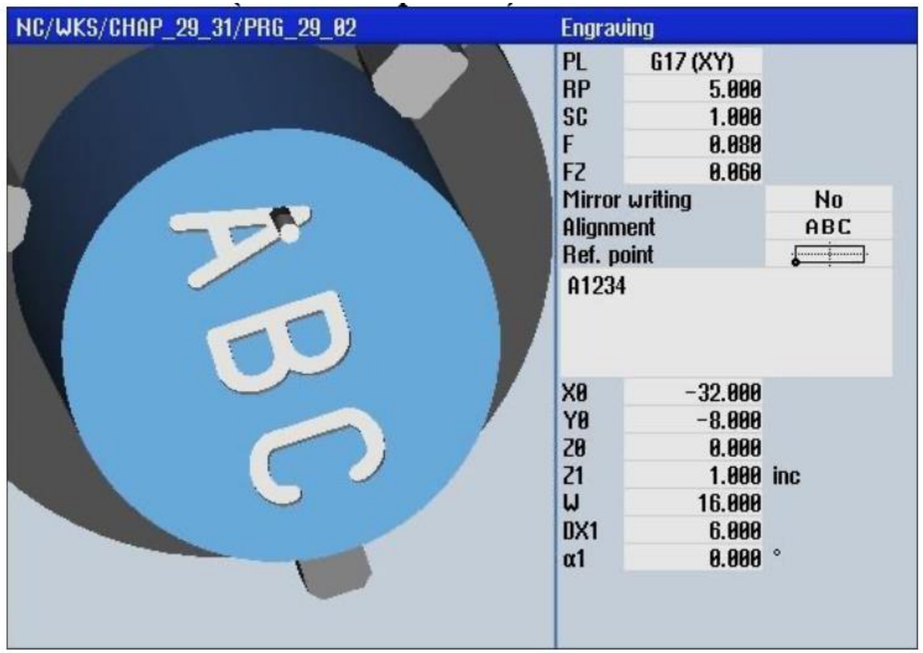

Fig. 188. CYCLE82: window for the insertion of the parameters

Fig. 189. Use of the engraving cycle to write on the circumference

Fig. 190. Use of the engraving cycle to write on the front face of the workpiece

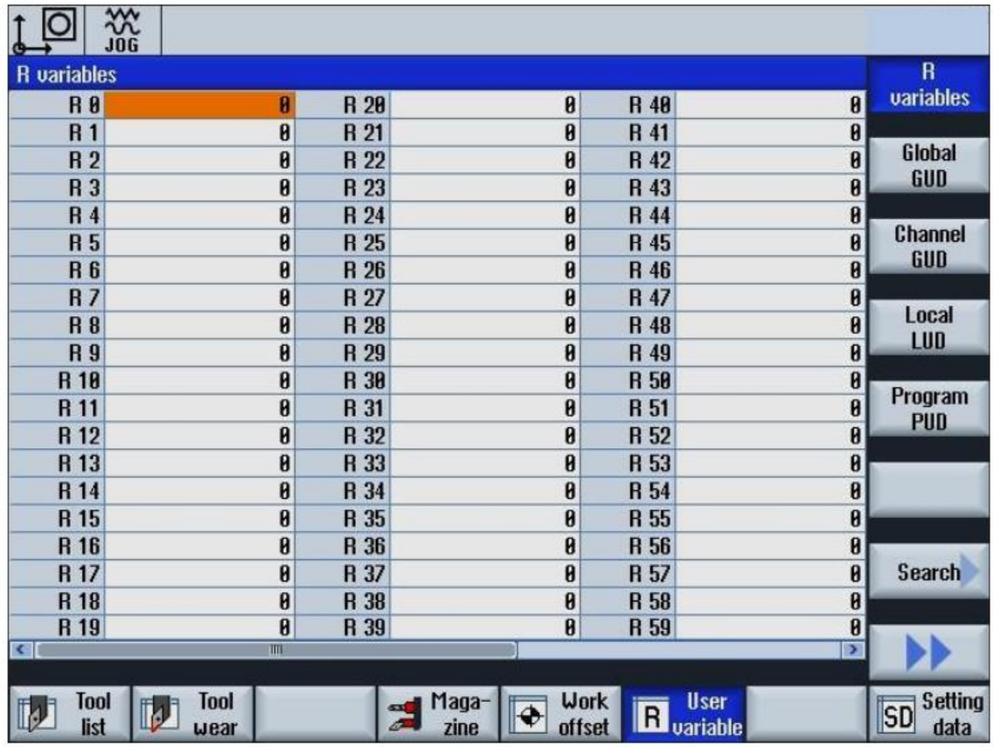

Fig. 191. Page for the calculation variables 'R'

OFFSET	OFFSET.
R User variable	Horizontal softkey User variables.
R variables	Vertical softkey R variables.

Fig. 192. Procedure for access to the 'R' variables page

The first letter after $ stands for:

$M	Machine data.
$S	Setting data.
$T	Tool management data.
$P	Programmed values.
$A	Current values.
$V	Service data.

Fig. 193. Meaning of the first letter in the name of system variables

The second letter after $ stands for:

N	Global NCK.
C	Specification for channels.
A	Specification for axis.

Fig. 194. Meaning of the second letter in the name of system variables

+	Sum.
-	Subtraction.
*	Multiplication.
/	Division.

Fig. 195. Arithmetic functions

SIN(…)	Sine of the angle.
COS(…)	Cosine of the angle.
TAN(…)	Tangent of the angle.
ASIN(…)	Arcsine.

ACOS(…)	Arccosine.
ATAN2(1°, 2°)	Arctangent with argument arcsine (1°) and argument arccosine (2°).

Fig. 196. Trigonometric functions

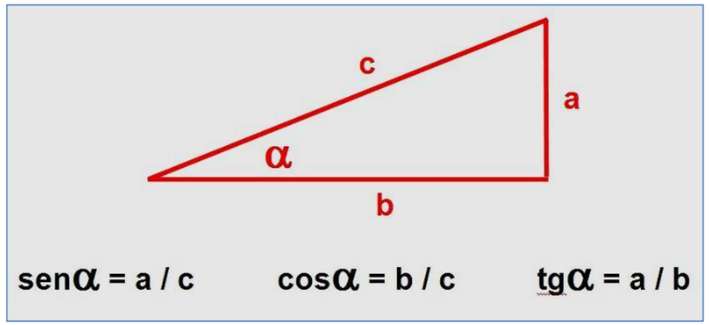

Fig. 197. Calculation scheme of the trigonometric functions

TRUNC	Whole part.
ROUND	Rounding to whole number.

Fig. 198. Result management functions

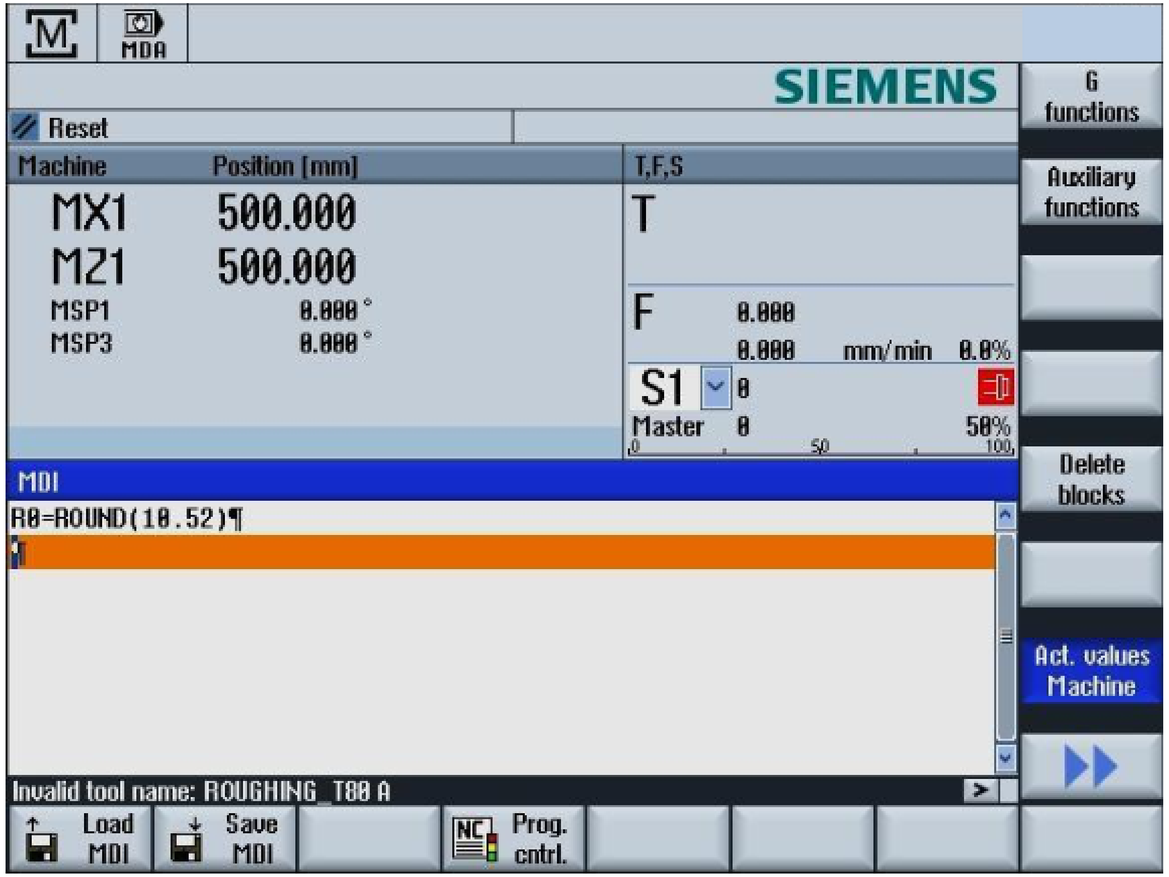

Fig. 199. Window for manual data entry

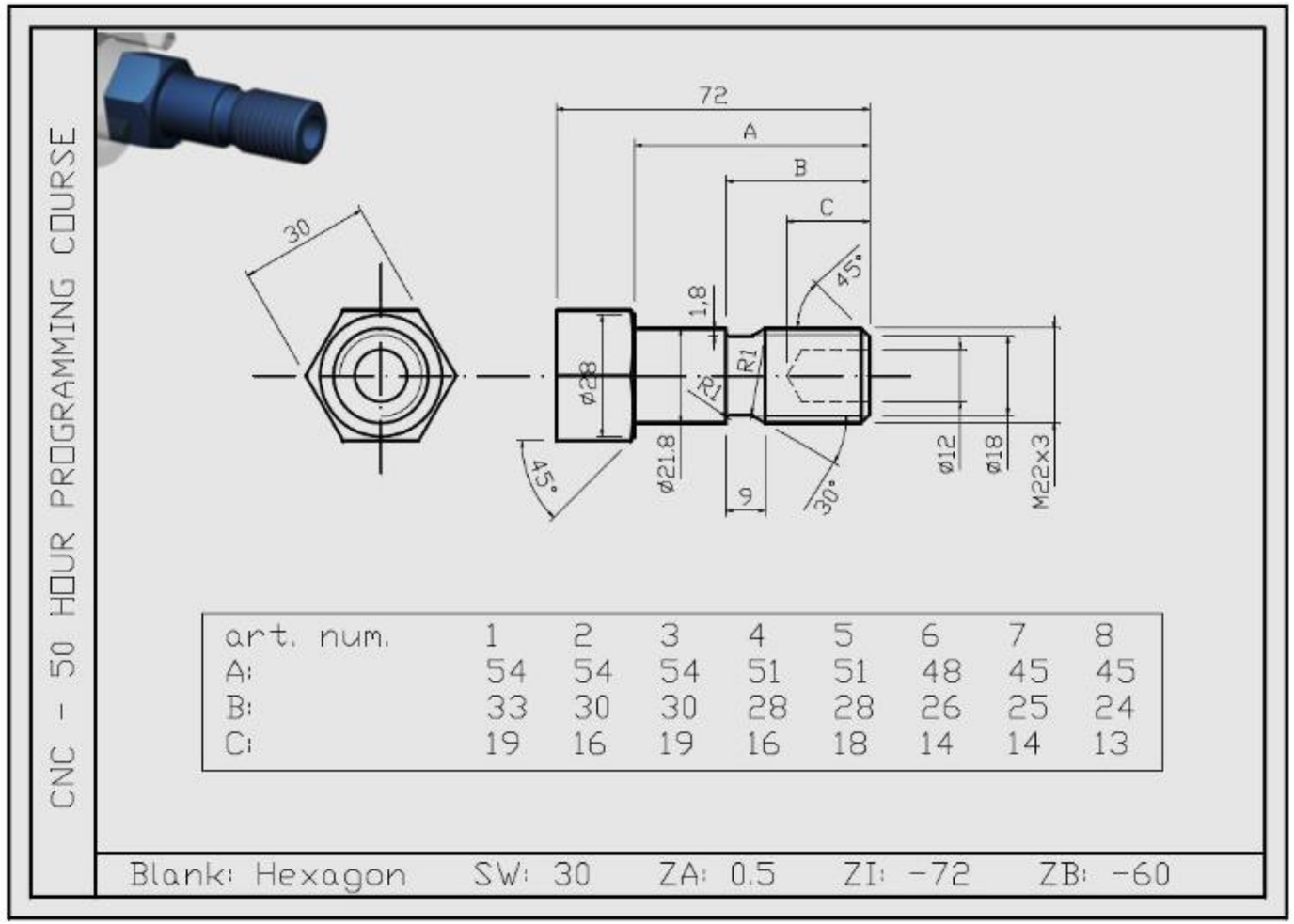

Fig. 200. Drawing of a workpiece family

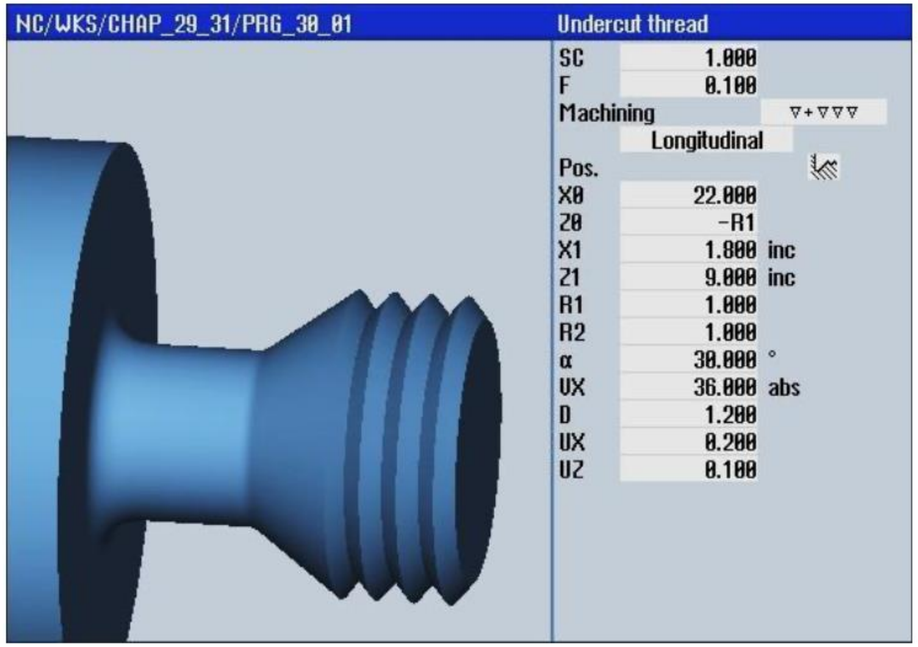

Fig. 201. CYCLE940 with parameter defined by means of the variable R1

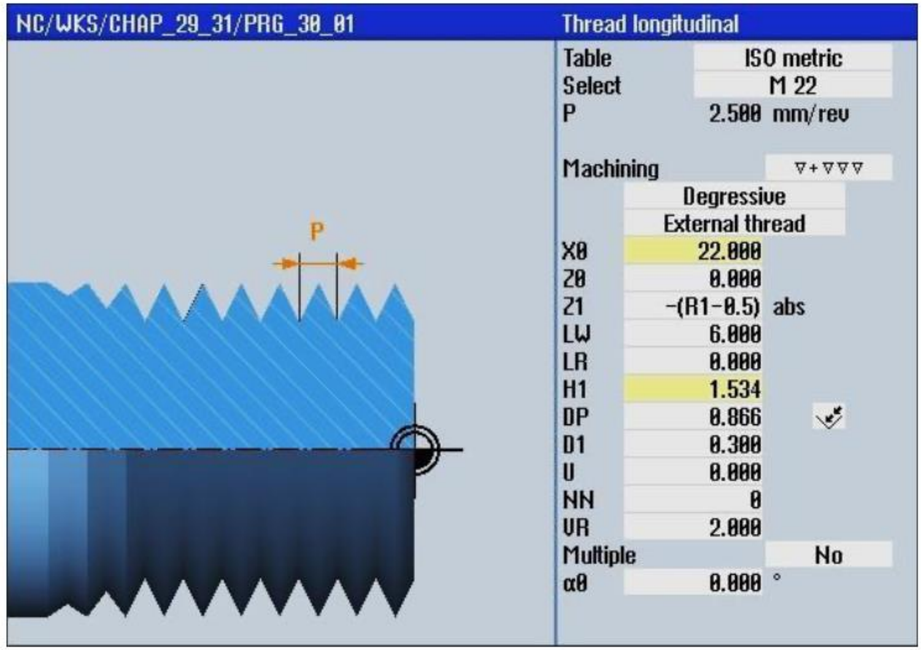

Fig. 202. CYCLE99 with parameter defined by the variable R1 in a formula

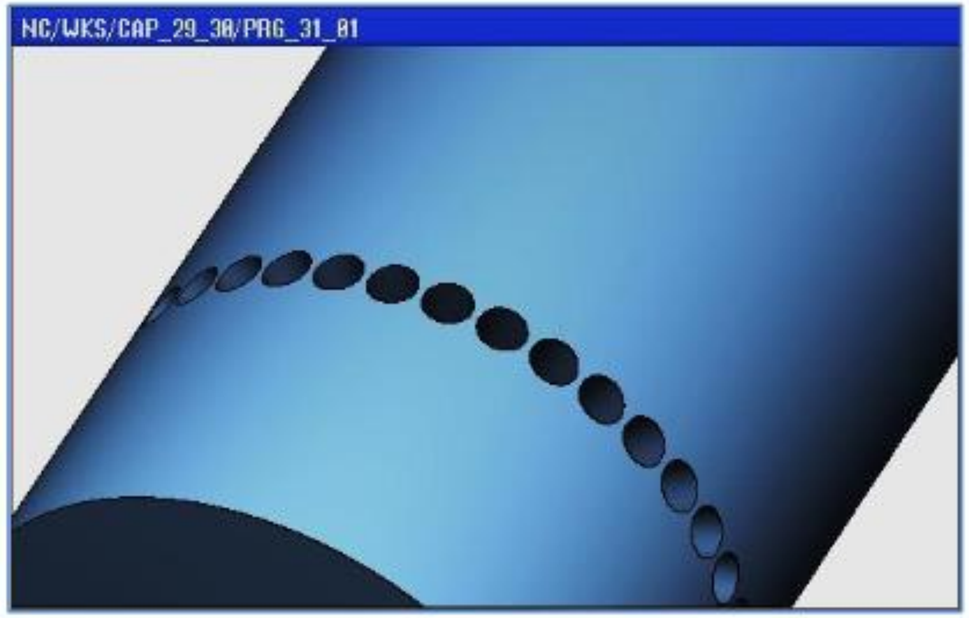

Fig. 203. Execution of equidistant holes distributed over 360°

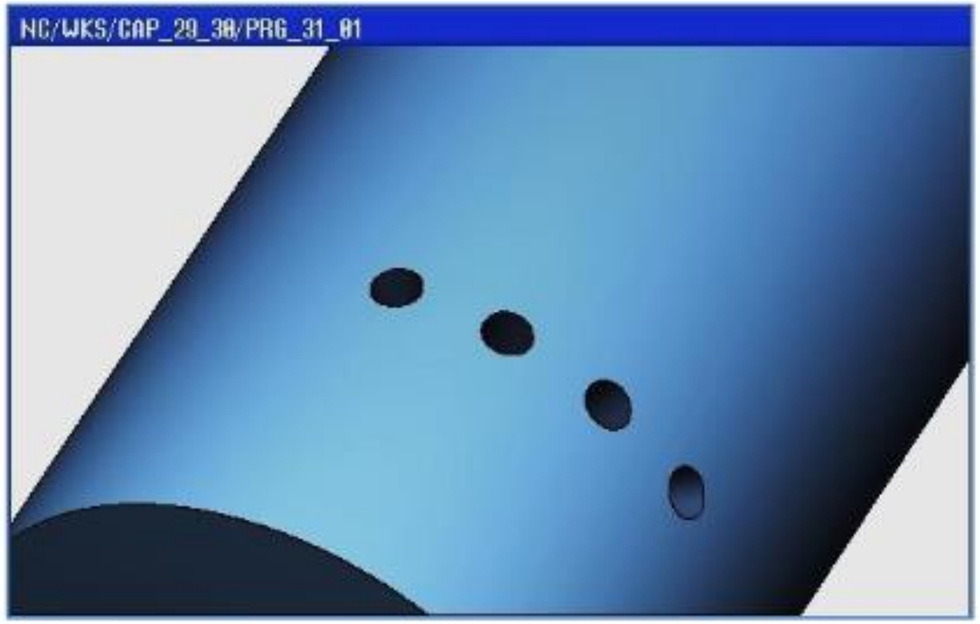

Fig. 204. Execution of a series of holes with constant lead, but not distributed over 360°

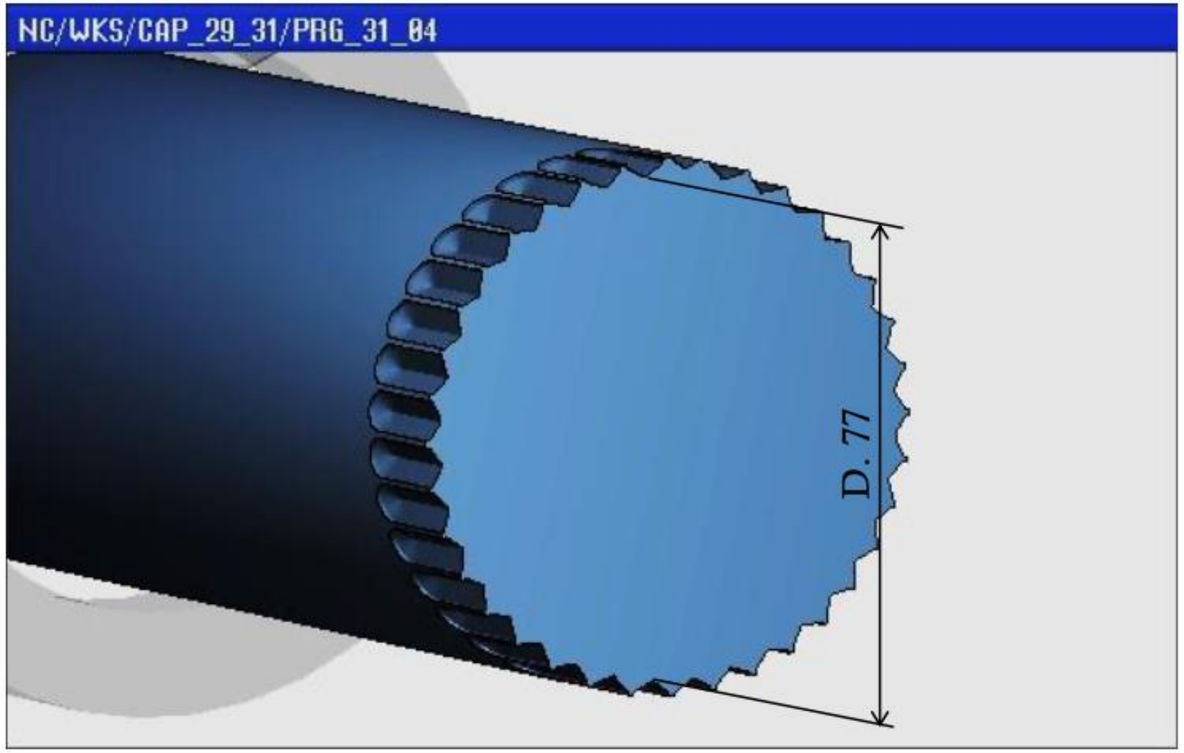

Fig. 205. Part executed with the algorithm entered in the program PRG_31_04

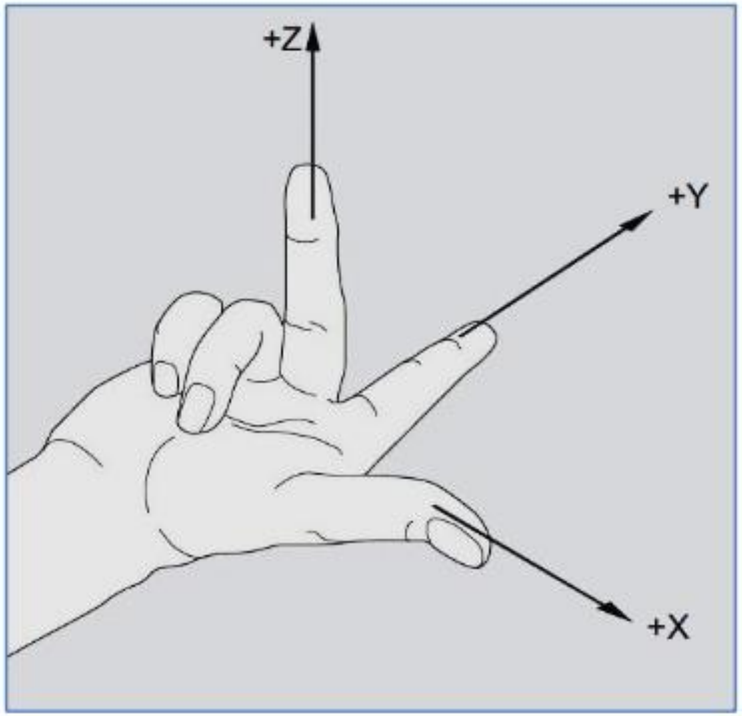

Fig. 206. The same right hand rule applies both to the lathe and to the mill.

Fig. 207. Positive direction of the axes: the arrows show the movements of the tool compared to the workpiece

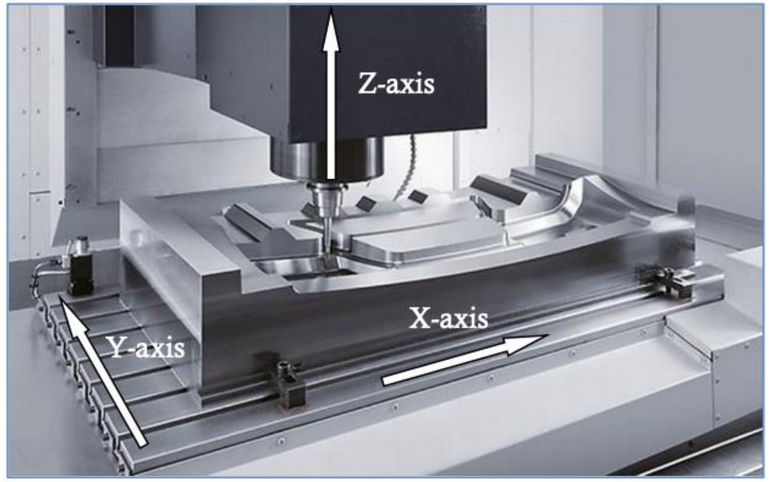

Fig. 208. Vertical mill

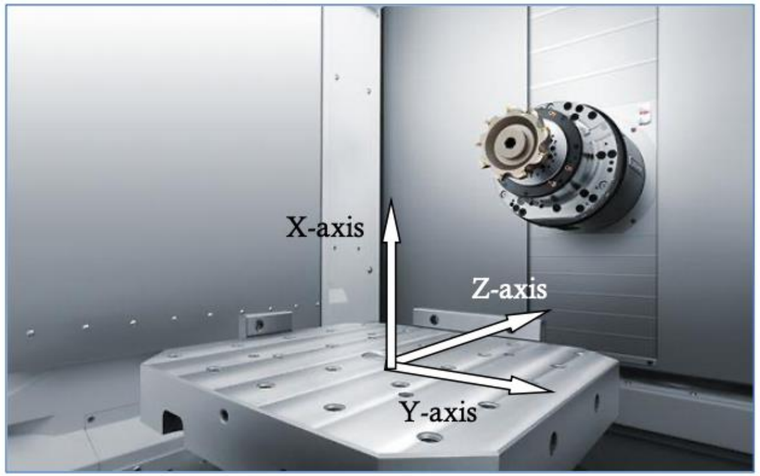

Fig. 209. Horizontal mill

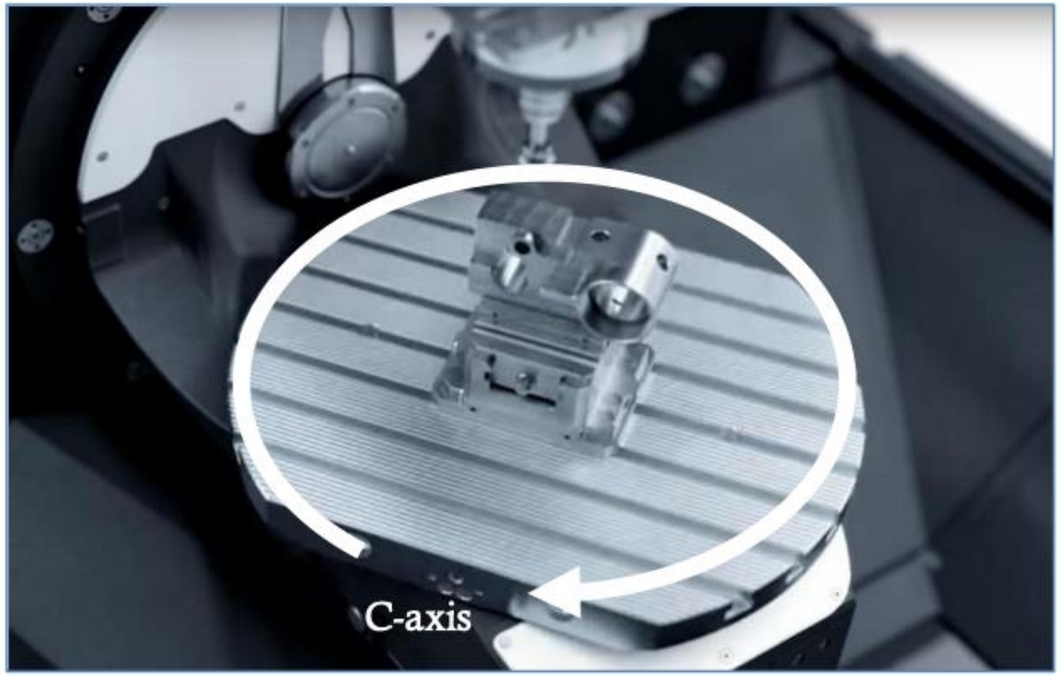

Fig. 210. C-axis in a machining center

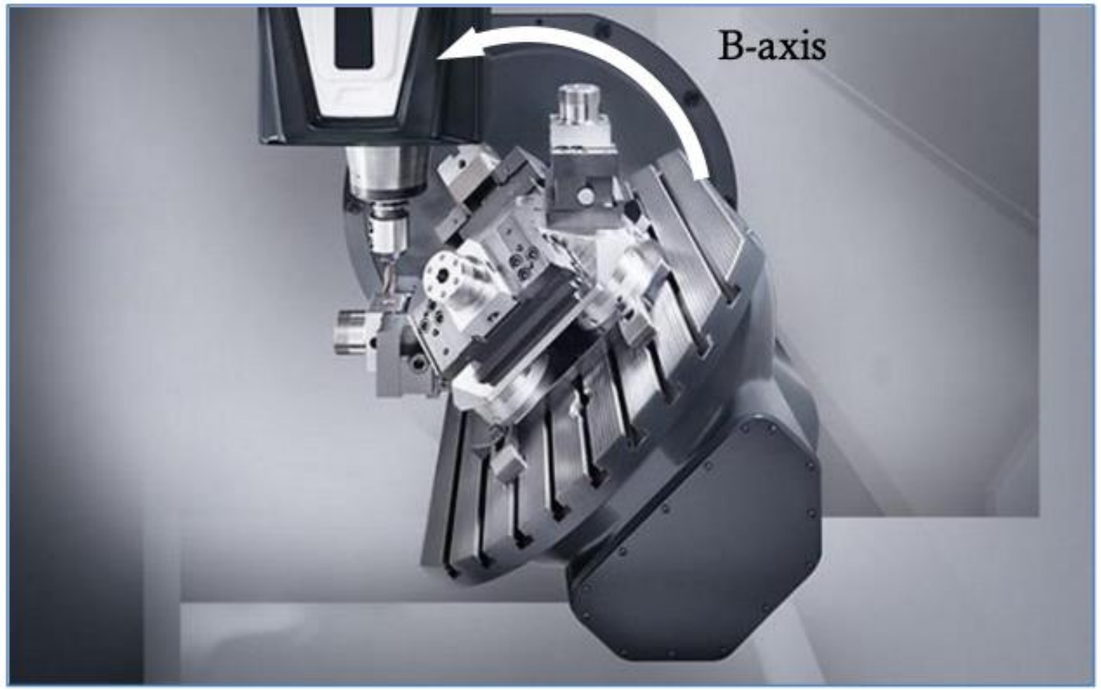

Fig. 211. B-axis in a machining center

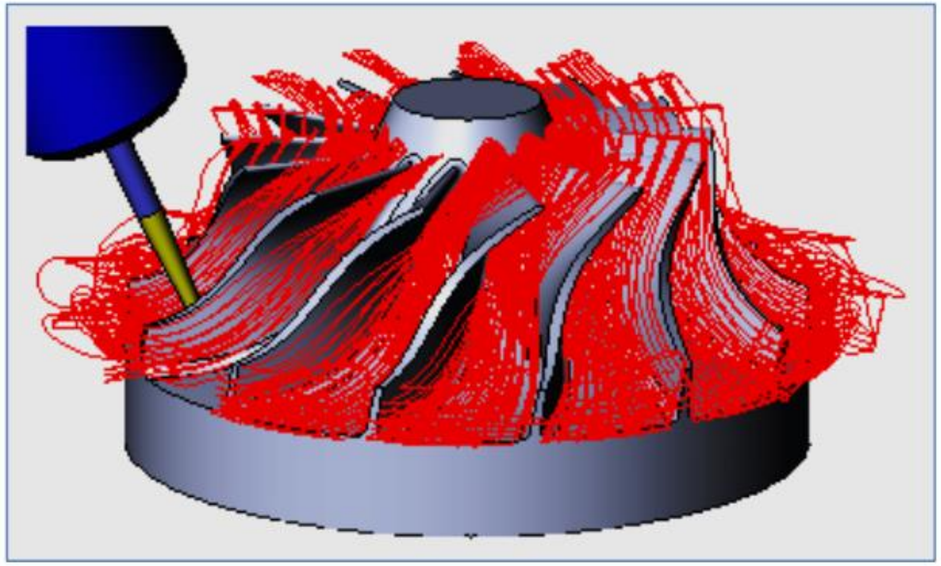

Fig. 212. CAM-generated profile for five-axis machining center

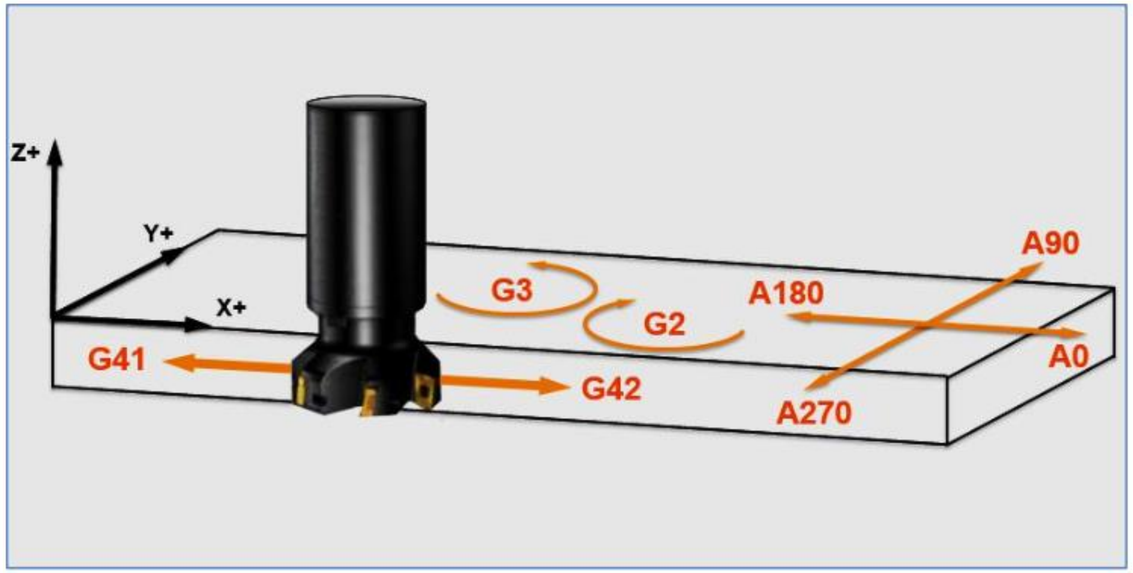

Fig. 213. Programming scheme on plane G17

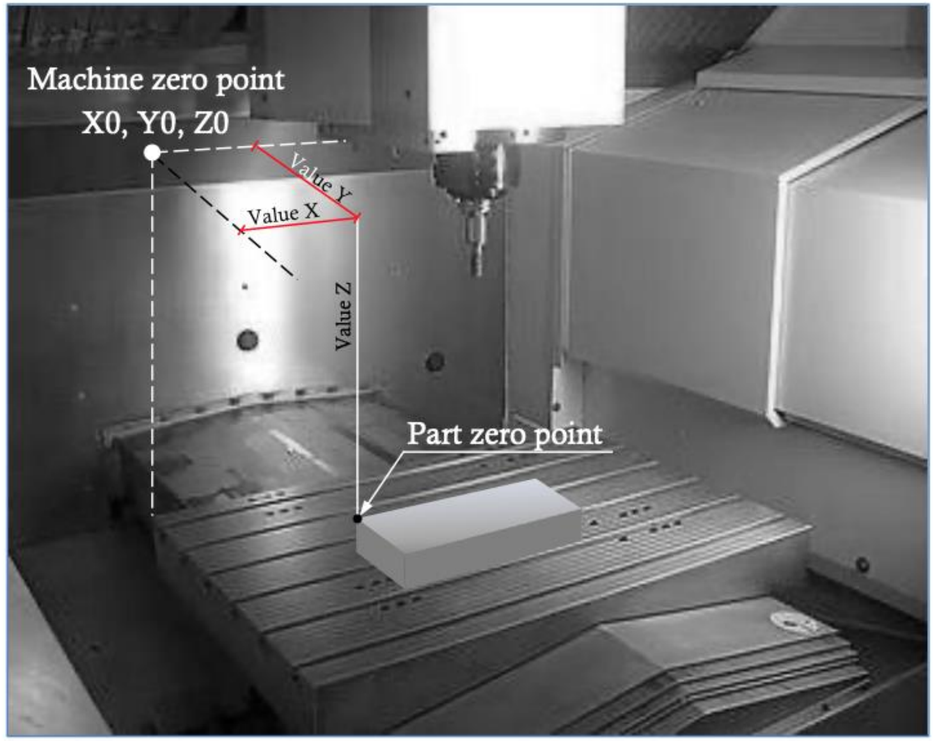

Fig. 214. Position of the machine zero point and values to enter into the zero offset function for the definition of the part zero point

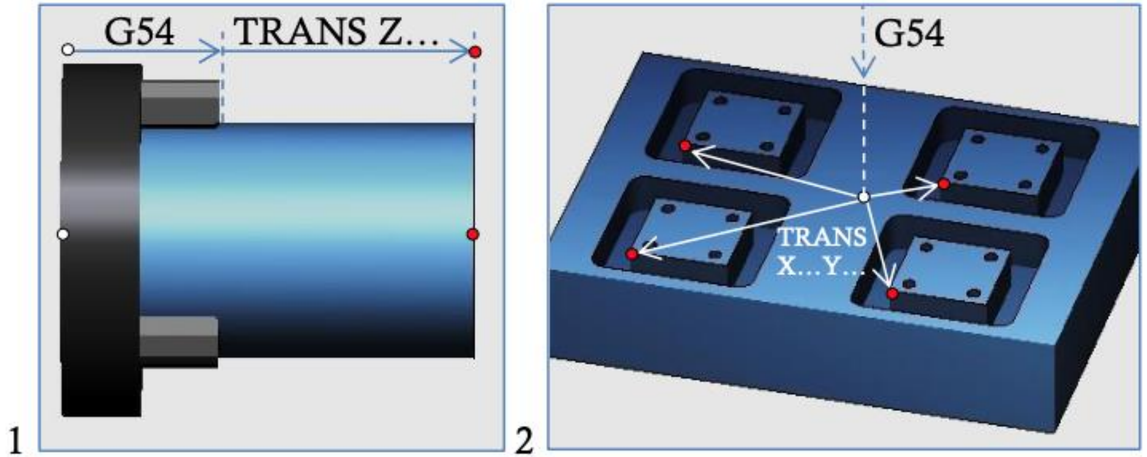

Fig. 215. Use of TRANS: 1: in a lathe; 2: in a machining center

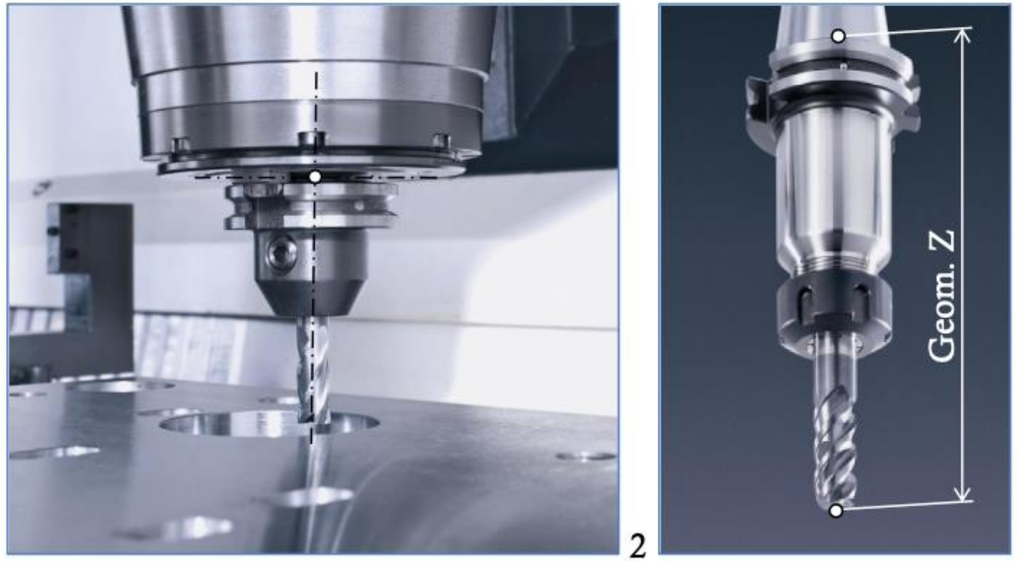

Fig. 216. 1:Point moved by the NC; 2:Offset value of a mill on the Z-axis

Fig. 217. Measuring system outside the machine

CNC - 50 HOUR PROGRAMMING COURSE

Fig. 218. Start-up of the mill in the training software

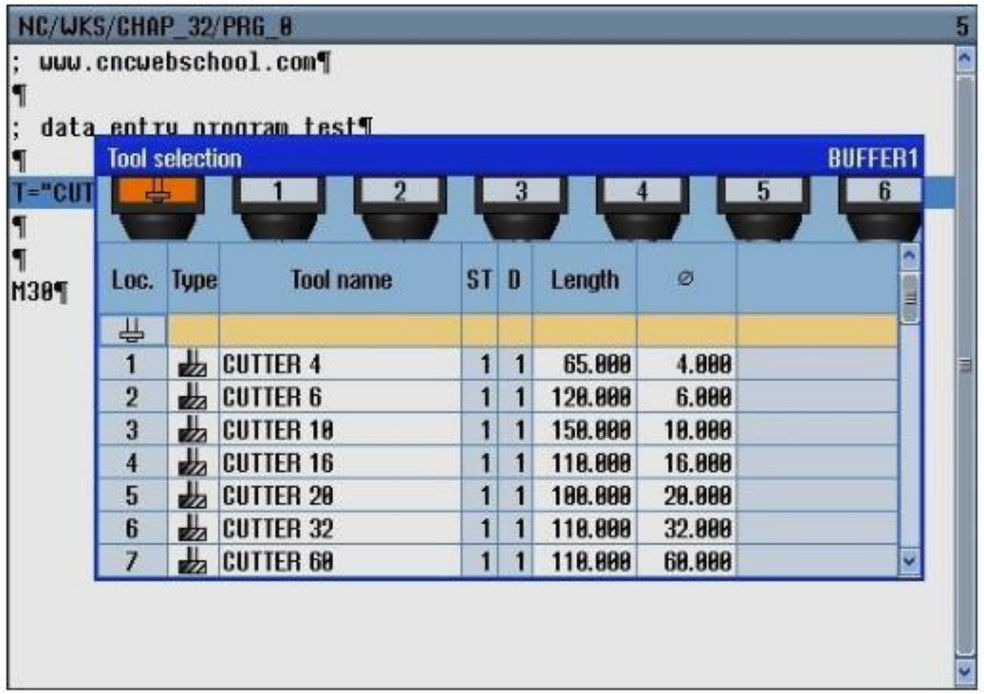

Fig. 219. Page for the selection of the tools directly from the magazine

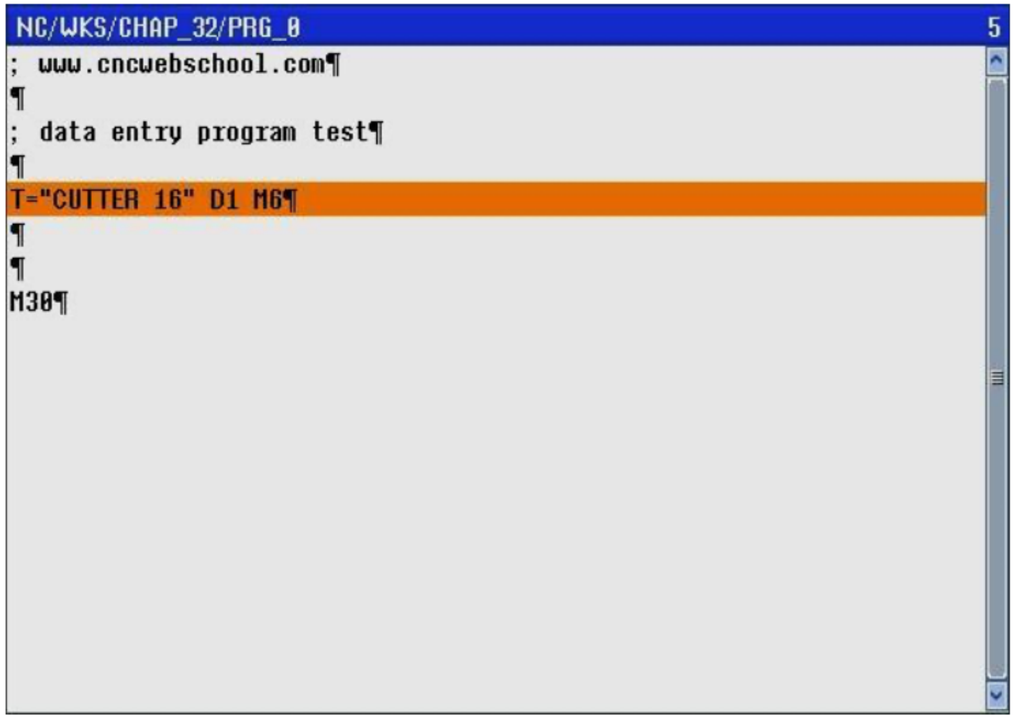

Fig. 220. Completion of the direct tool call instruction in the program

Blank part:	Cylinder
XA:	Cylinder diameter.
ZA:	Position of the upper face of the workpiece referring to the part zero point.
ZI - **absolute**: - **incremental**:	Distance from the lower face of the workpiece: **referring to the part zero point.** **referring to the upper face.**

Fig. 221. Description of the blank part dimensions: CYLINDER

Blank part:	Pipe
XA:	External diameter of the pipe.
XI:	Internal diameter of the pipe.

Fig. 222. Description of the blank part dimensions: PIPE

Blank part:	Block Centered
W:	Side of the rectangle positioned along the Y-axis.
L:	Side of the rectangle positioned along the X-axis.

Fig. 223. Description of the blank part dimensions: BLOCK CENTERED

Blank part:	Block
X0:	Coordinate X of the edge referring to the part zero point.
Y0:	Coordinate Y of the edge referring to the part zero point.
X1:	Coordinate X of the opposite edge referring to the part zero point (abs.) or to the first edge (incr.).
Y1:	Coordinate Y of the opposite edge referring to the part zero point (abs.) or to the first edge (incr.).

Fig. 224. Description of the workpiece dimensions: BLOCK

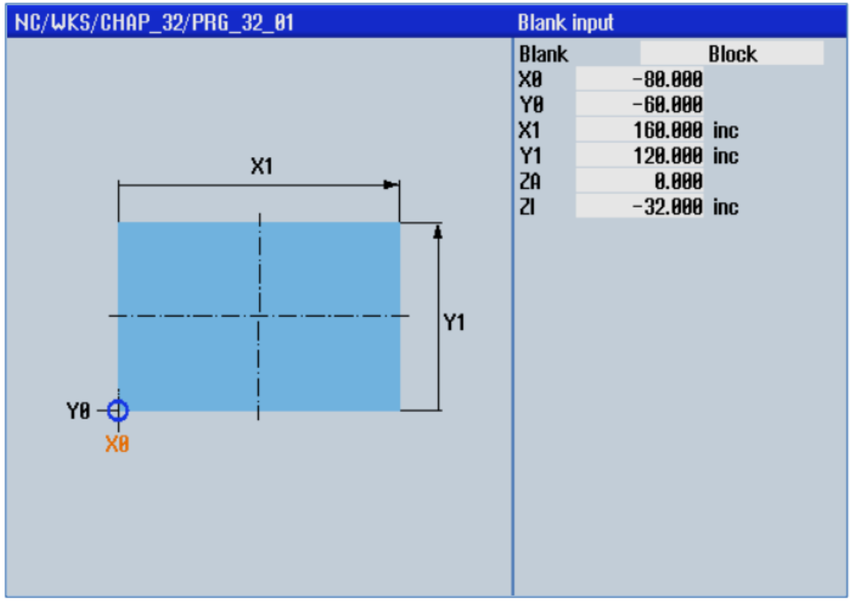

Fig. 225. Description of the blank part dimensions: BLOCK

Blank part:	N Corner
N:	Number of edges of the polygon.
SW:	Dimension of the polygon's key (available only for polygons with even number of edges).

Fig. 226. Description of the workpiece dimensions: N CORNER

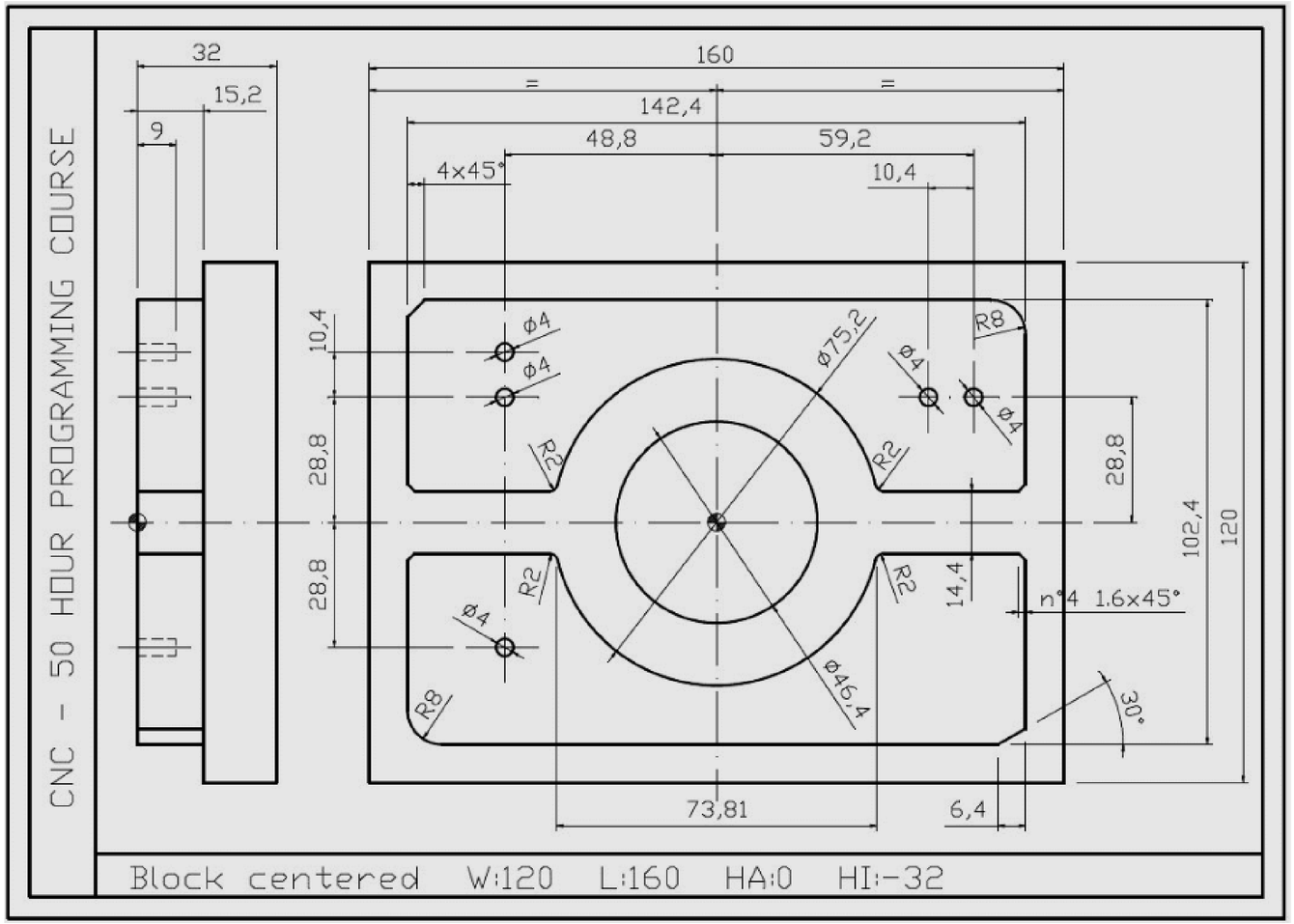

Fig. 227. Drawing of the part to be created

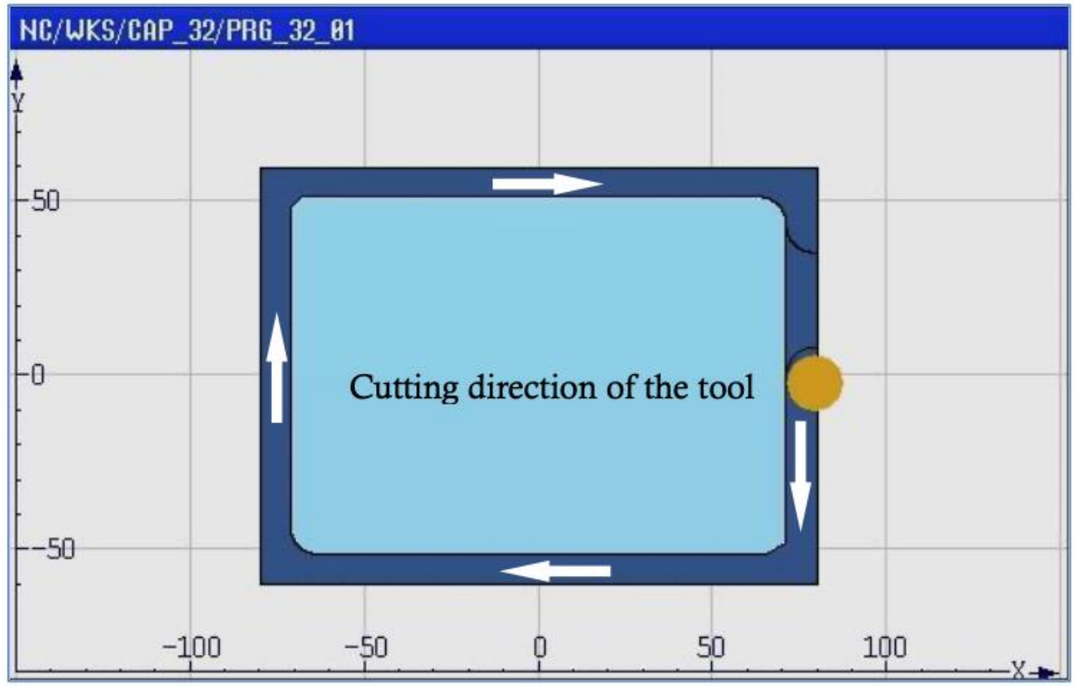

Fig. 228. Creation of the external profile

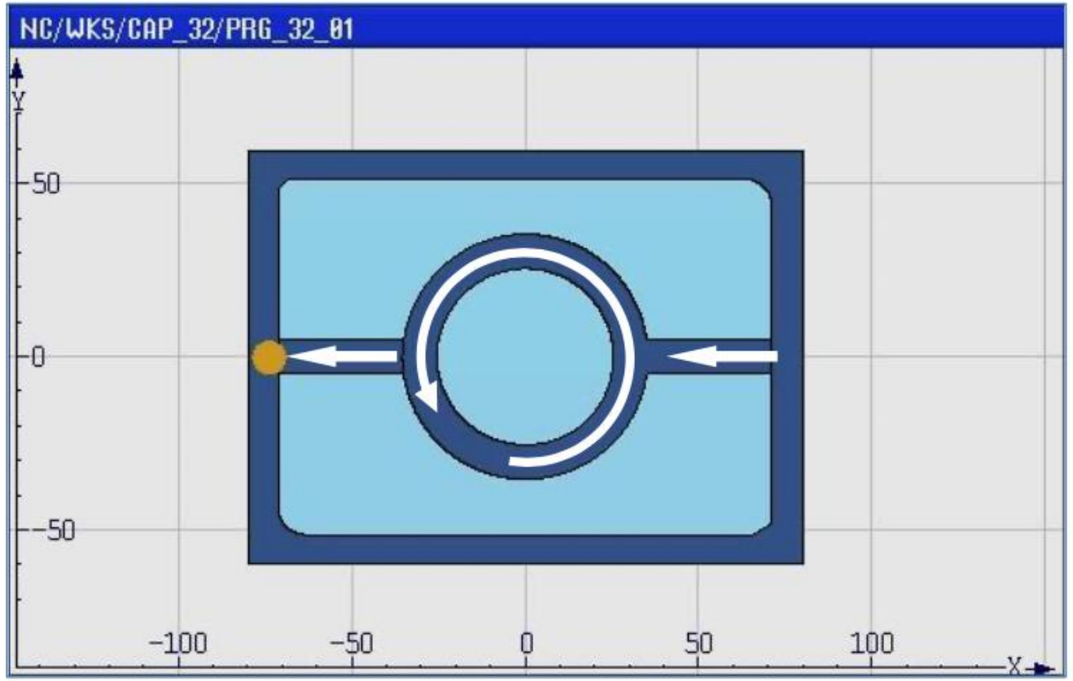

Fig. 229. Roughing of the internal profile

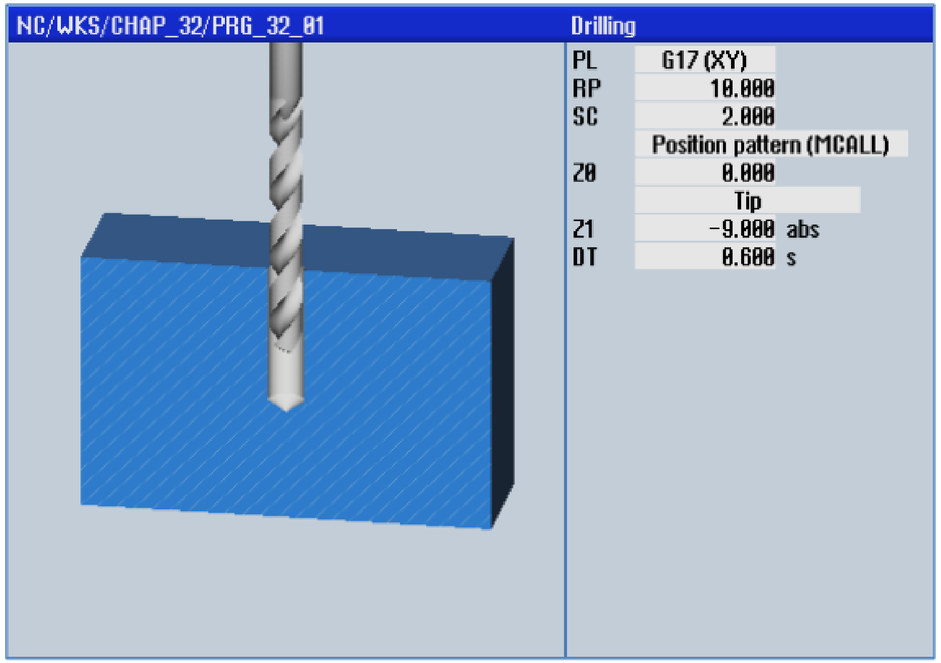

Fig. 231. Data entered in drilling cycle

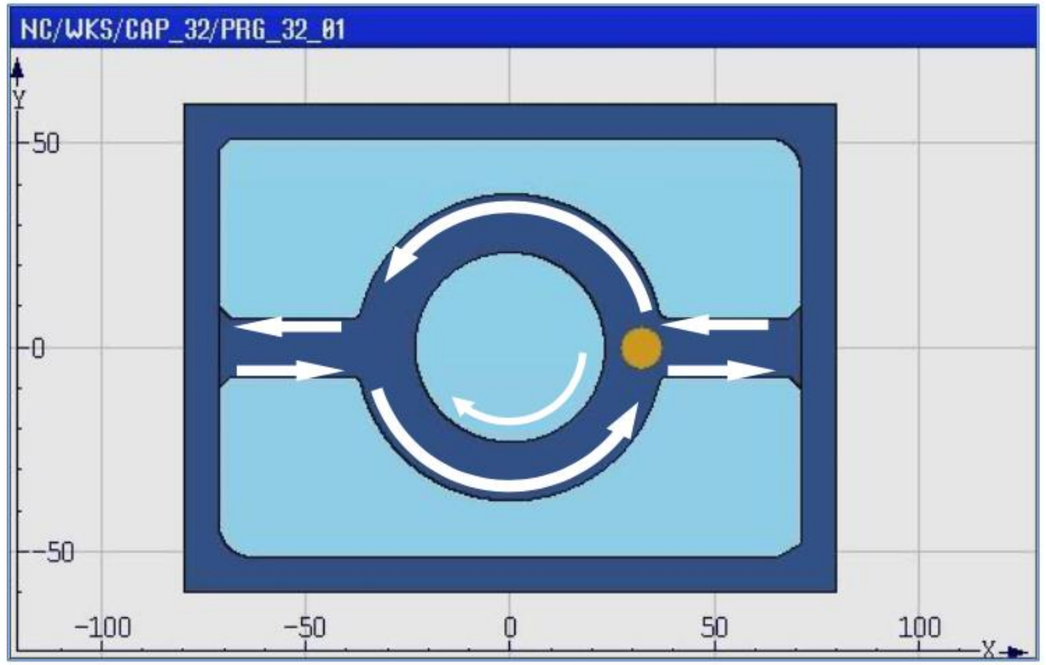

Fig. 230. Finishing of the internal profile

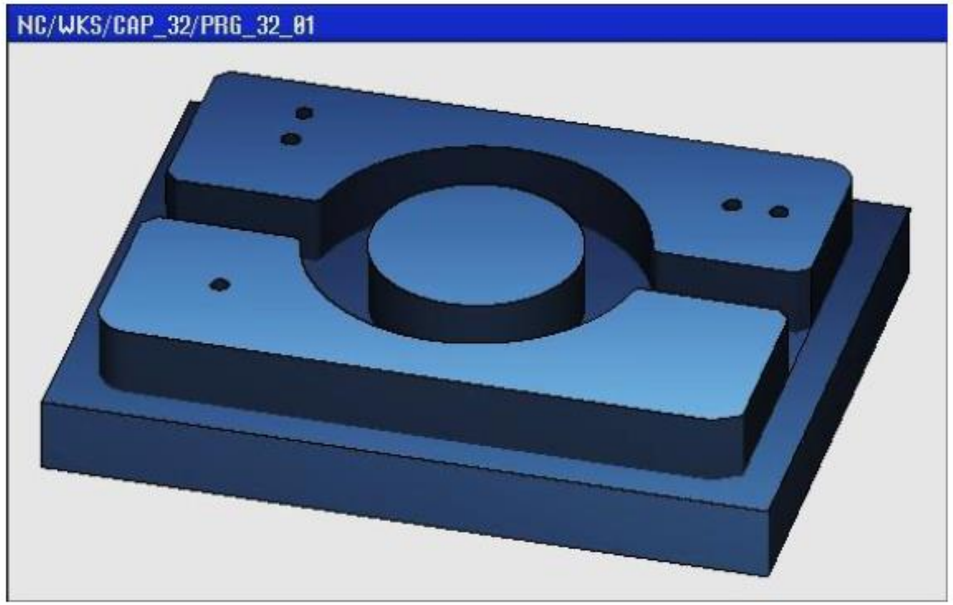

Fig. 232. Graphic 3D image of the finished part

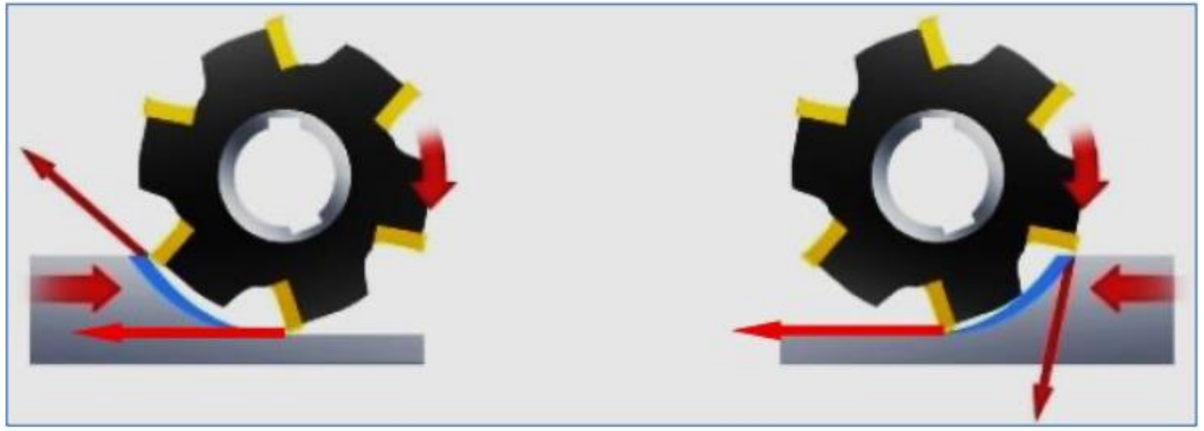

Fig. 233. Discordant cutting direction (left) and concordant cutting direction (right)

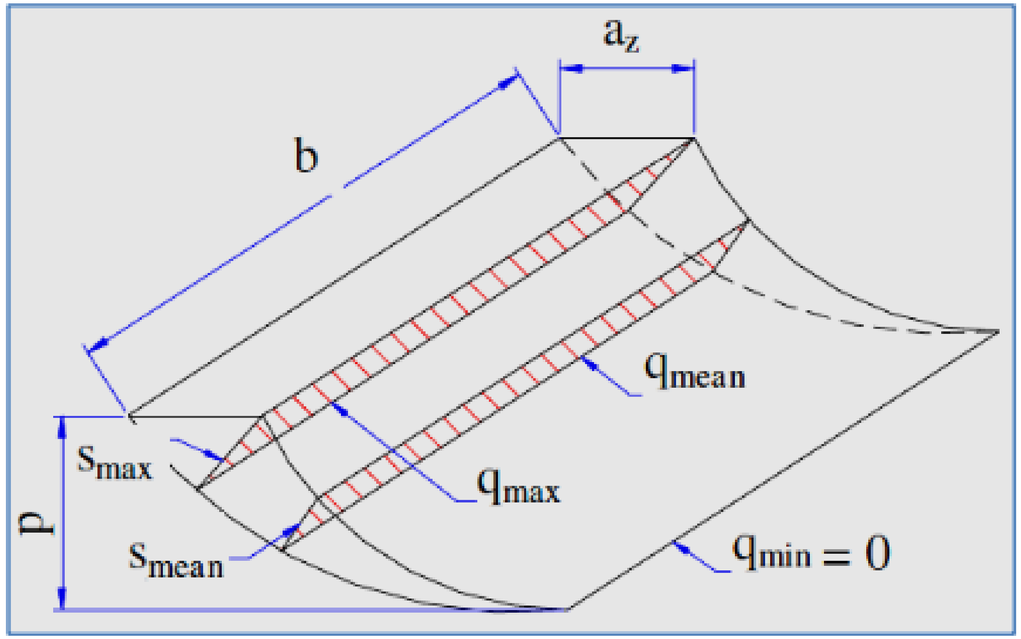

Fig. 234. Chip section area

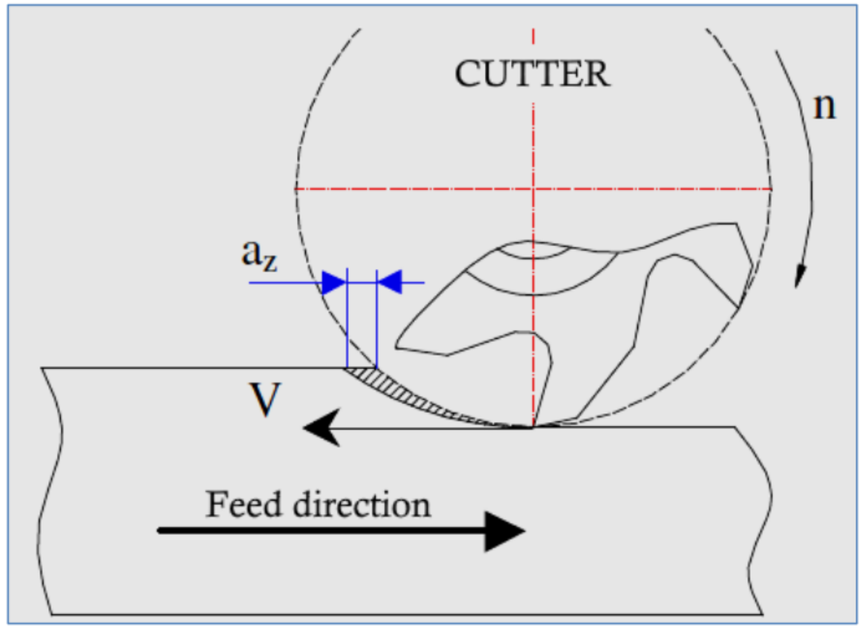

Fig. 235. Relative movement between cutter and workpiece with discordant feed direction

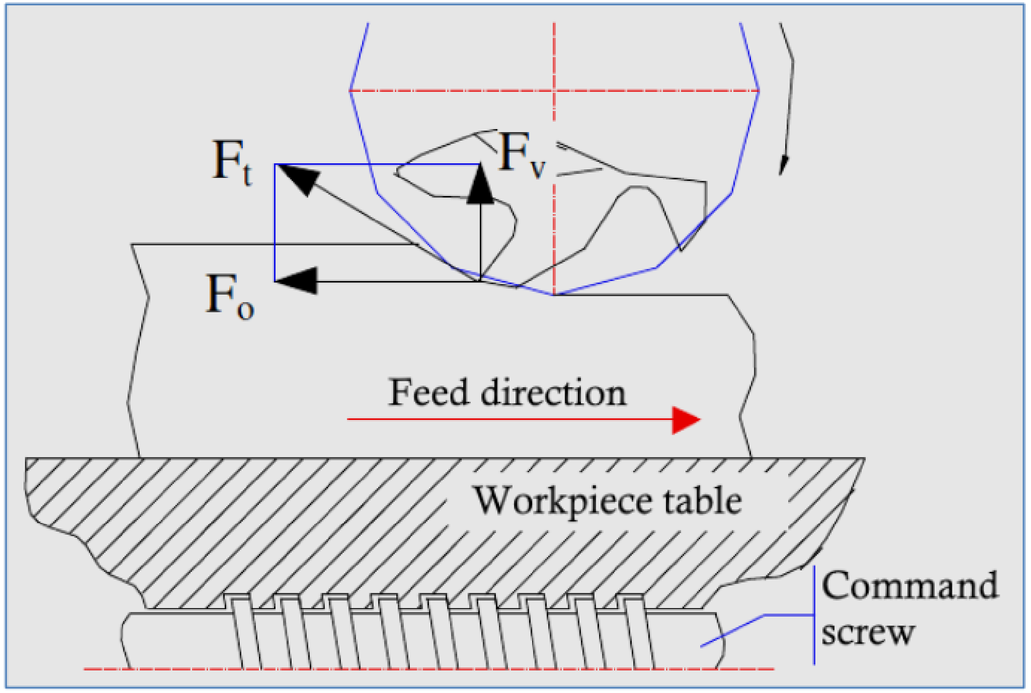

Fig. 236. Cutting forces with discordant feed direction

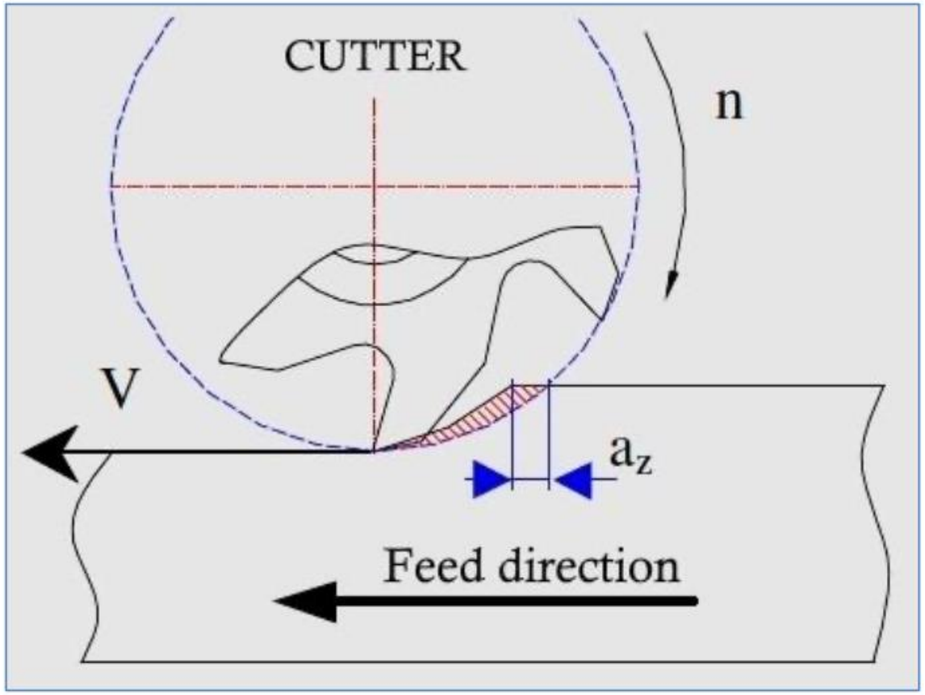

Fig. 237. Relative movement between cutter and workpiece with concordant feed direction

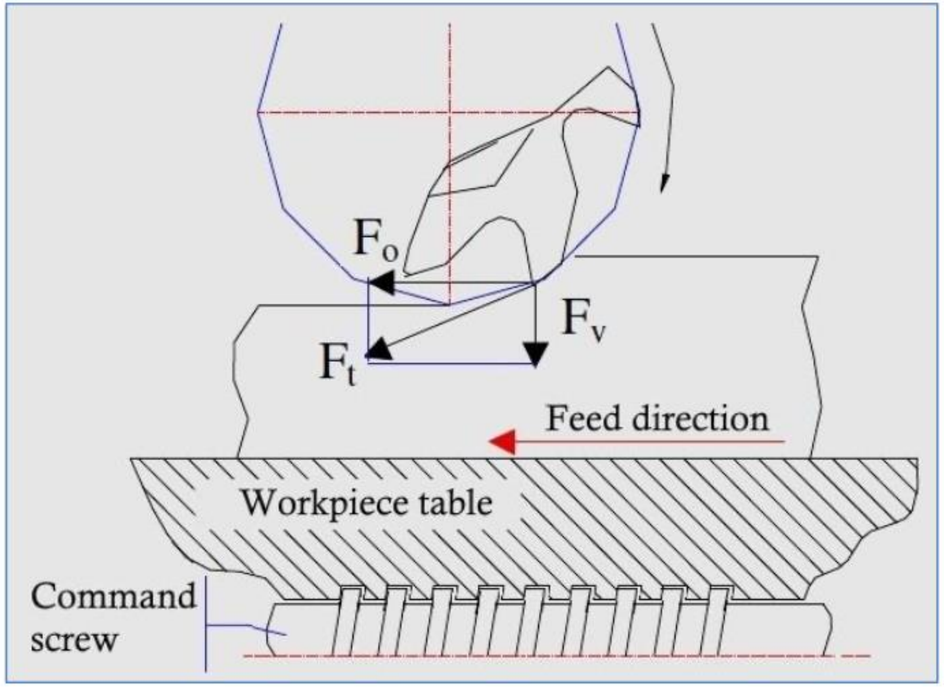

Fig. 238. Cutting forces with concordant feed direction

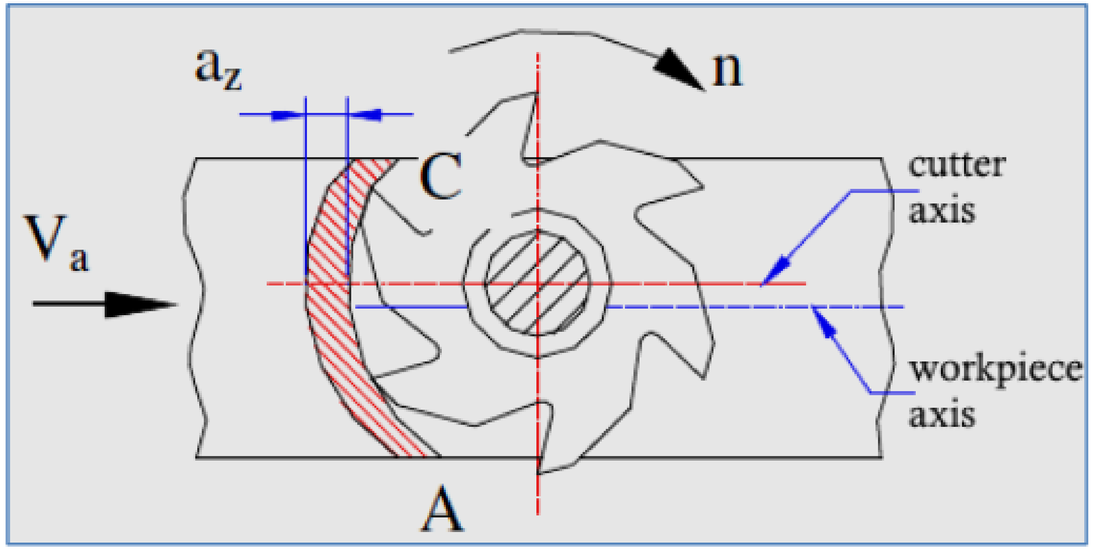

Fig. 239. Cutting forces with concordant feed direction

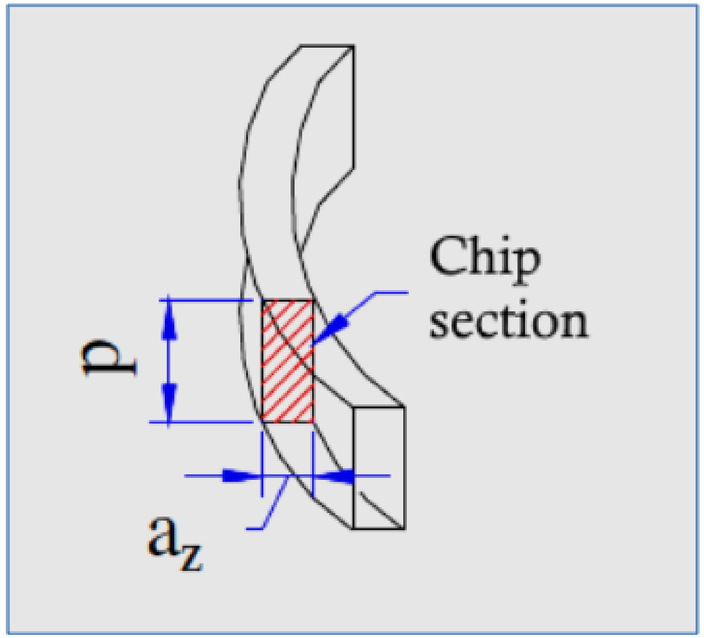

Fig. 240. Cutting forces with concordant feed direction

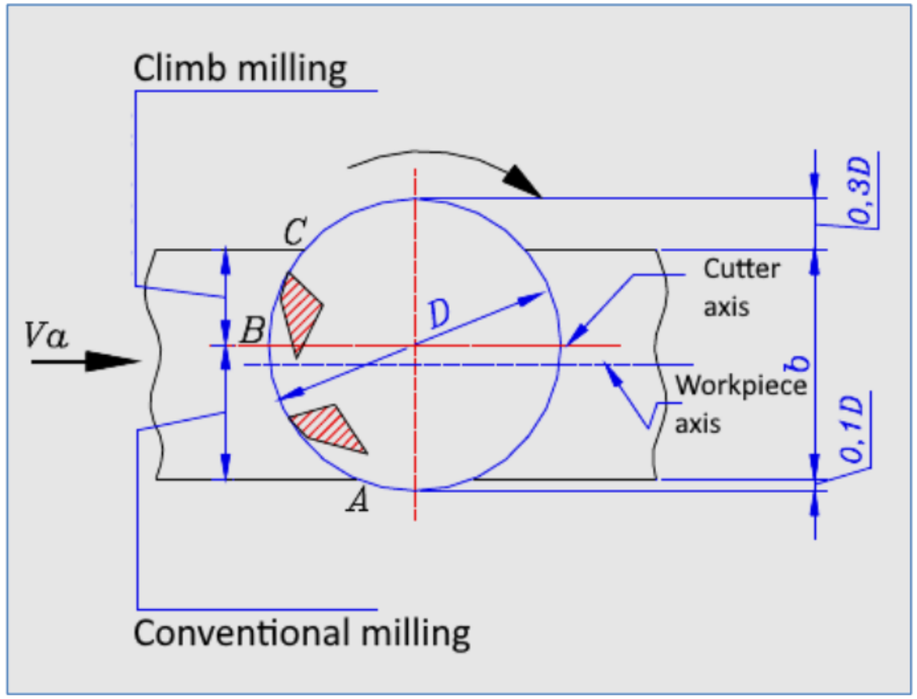

Fig. 241. Conventional and climb face milling

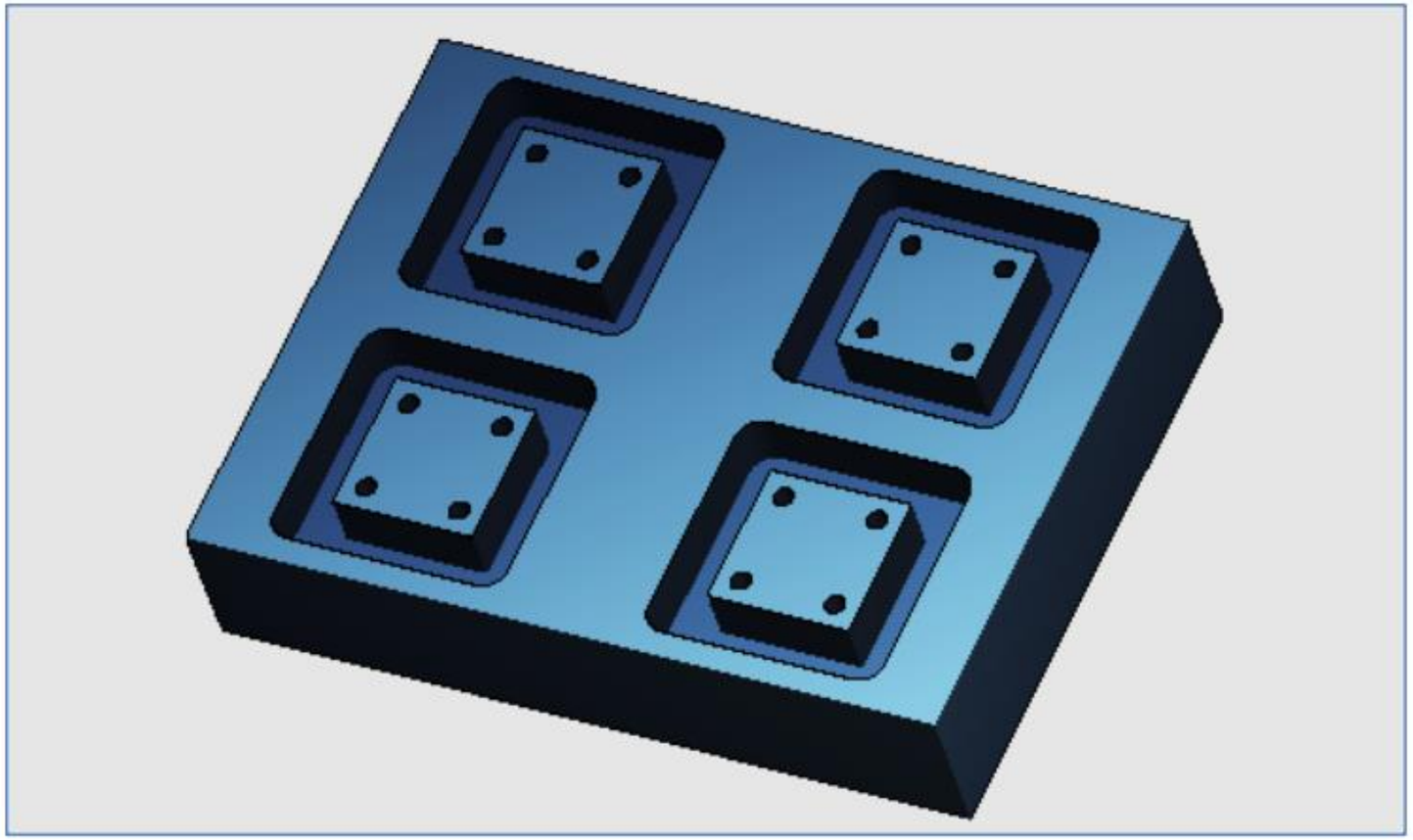

Fig. 242. Three-dimensional representation of the workpiece

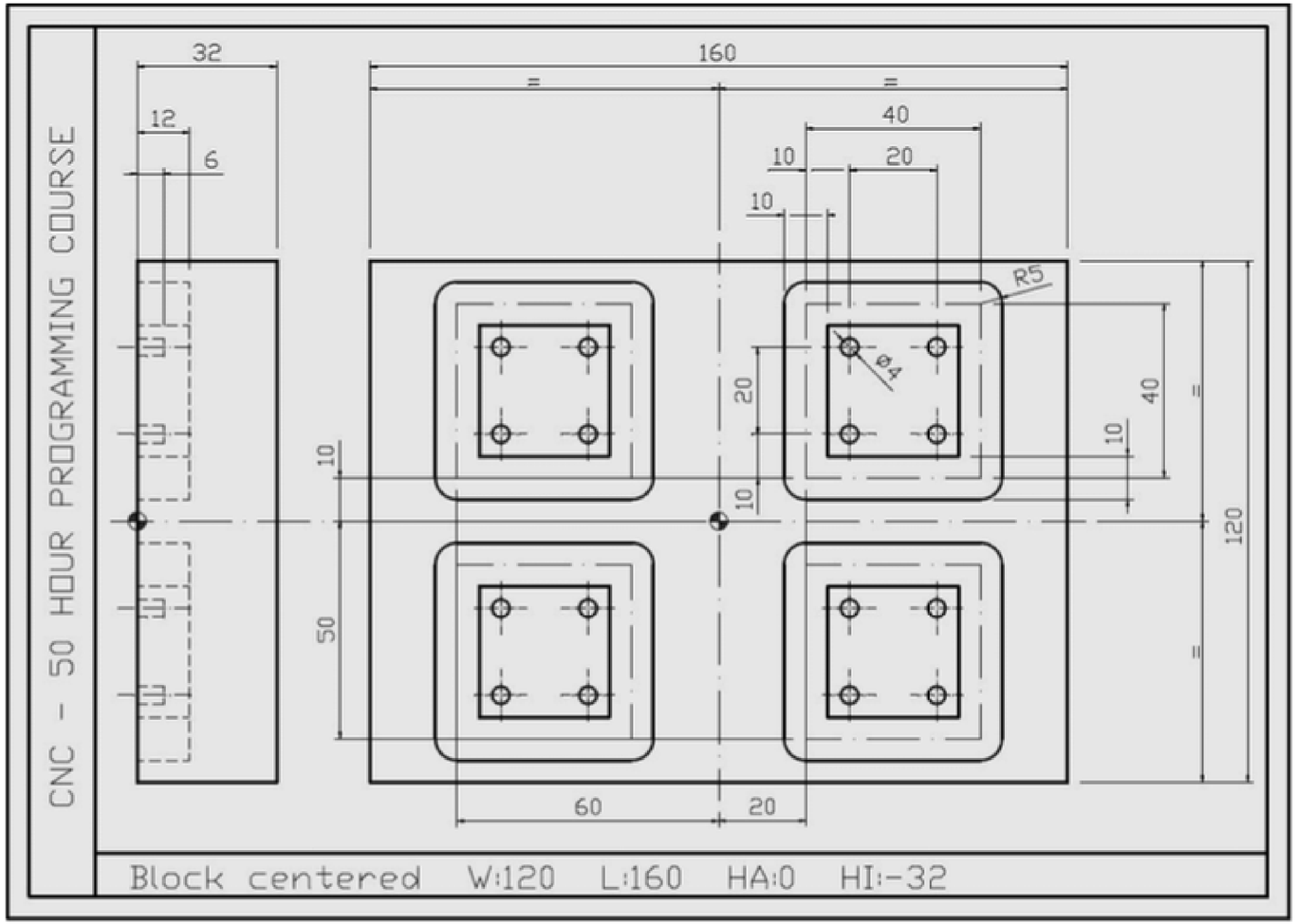

Fig. 243. Drawing of the part to create

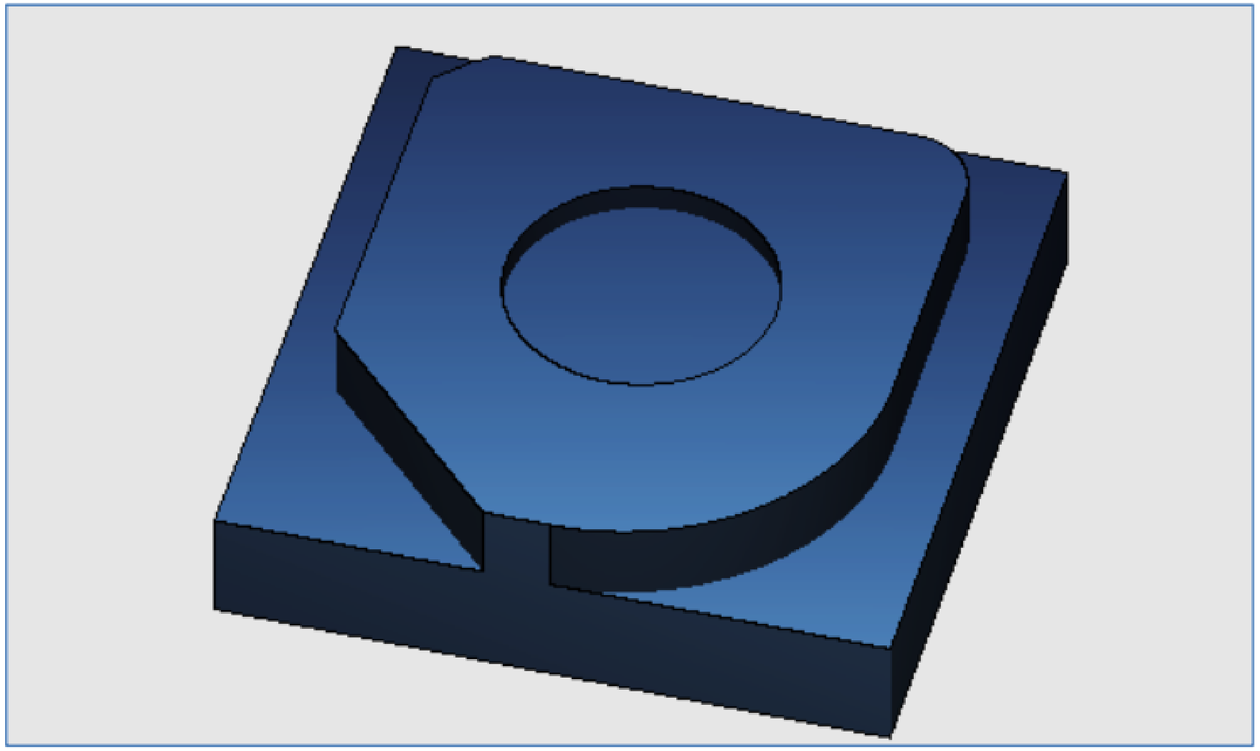

Fig. 244. Three-dimensional representation of the workpiece

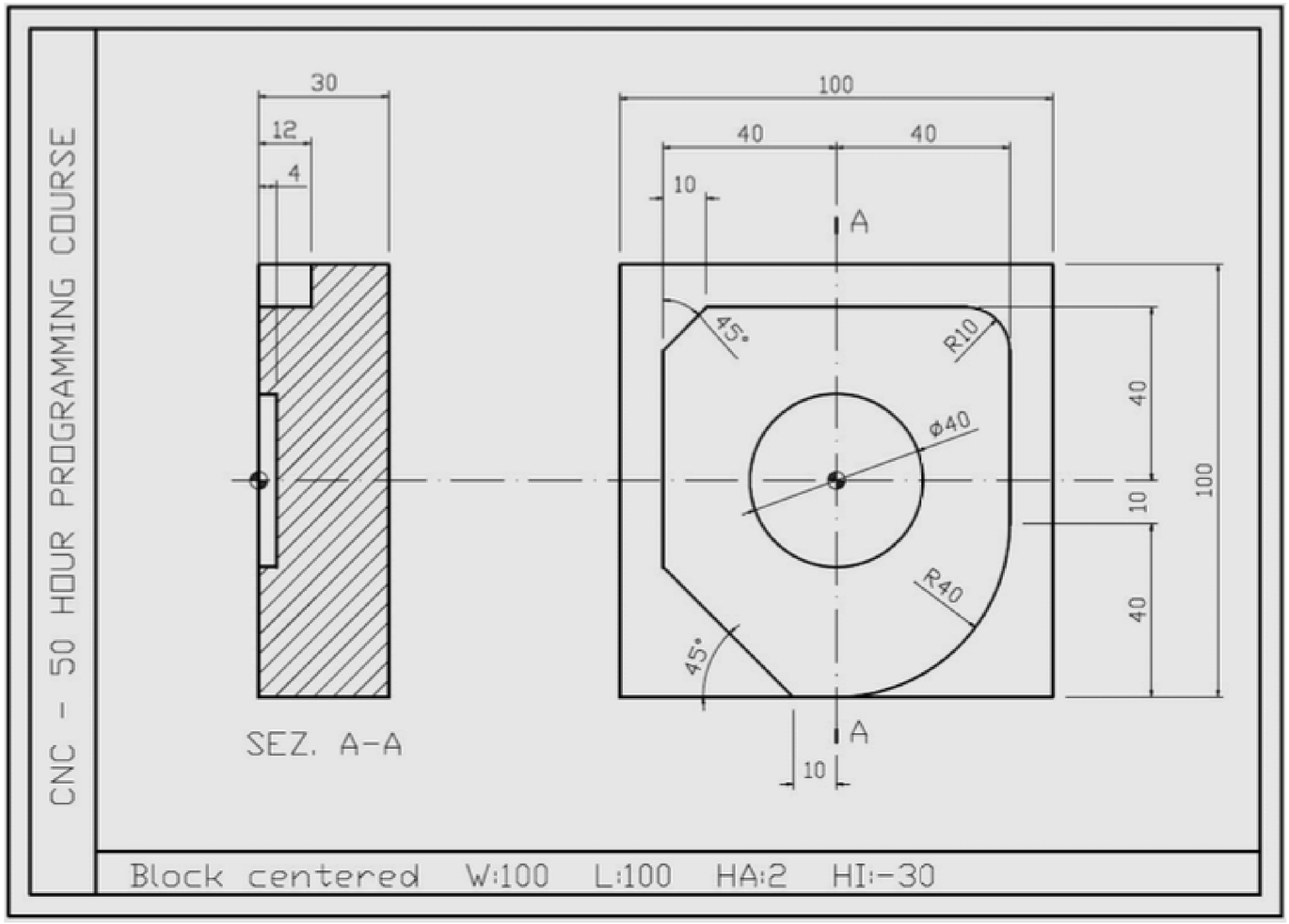

Fig. 245. Drawing of the part to create

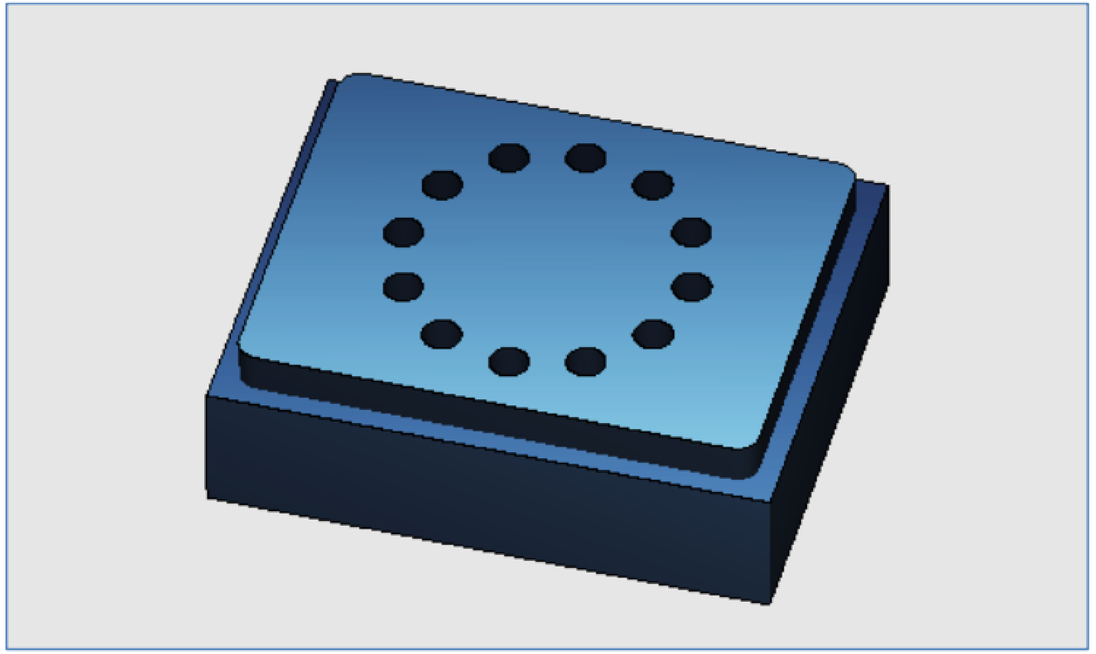

Fig. 246. Three-dimensional representation of the workpiece

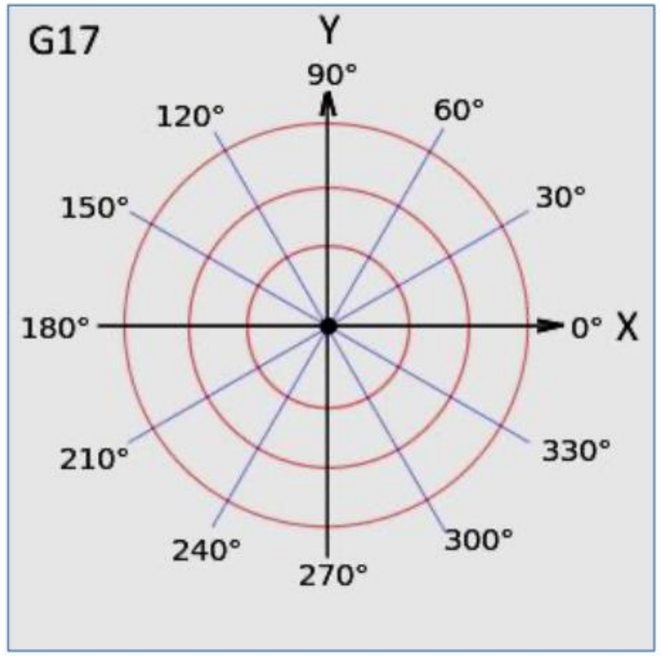

Fig. 247. Definition of a point in plane G17 using polar coordinates

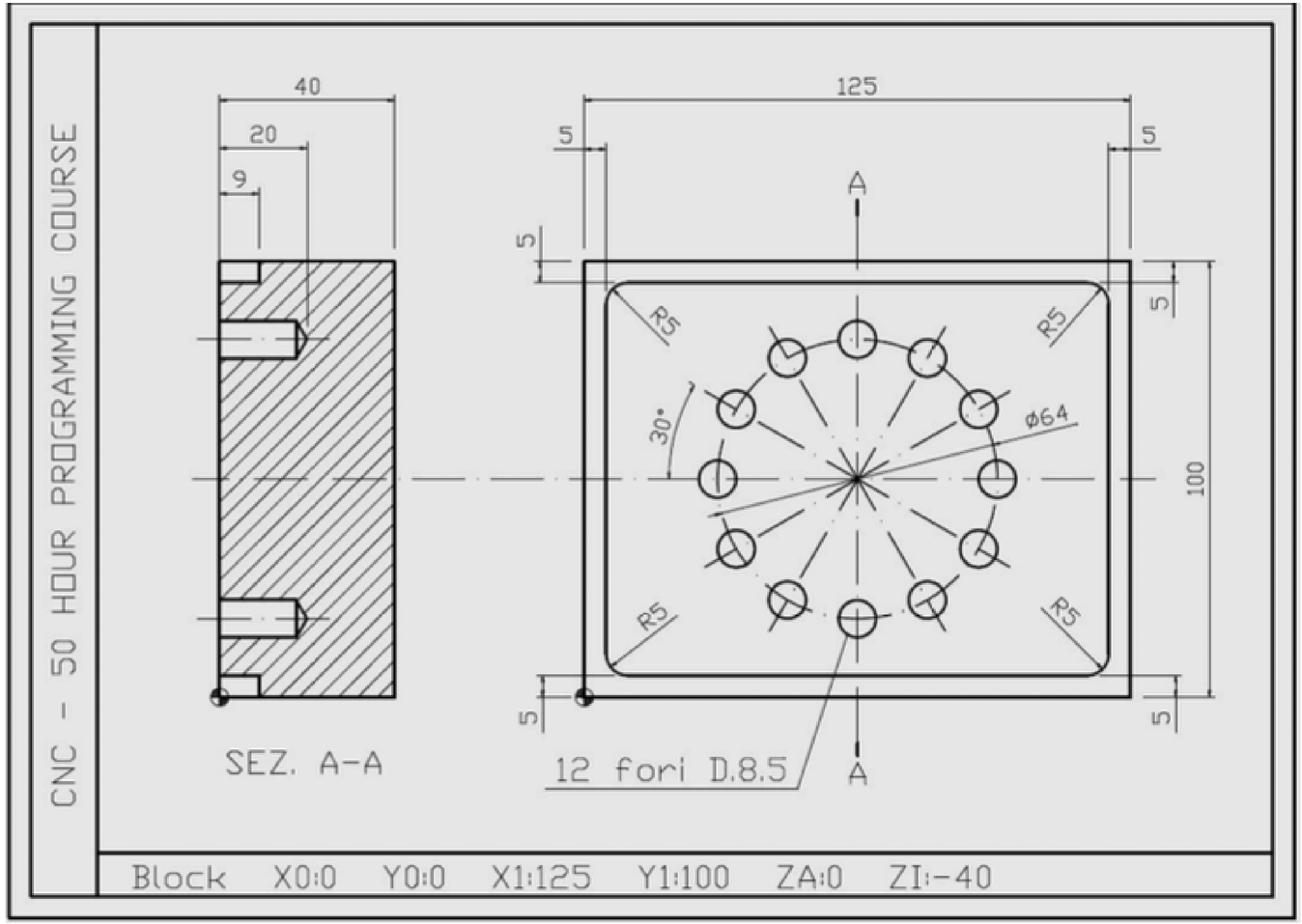

Fig. 248. Drawing of the part to create

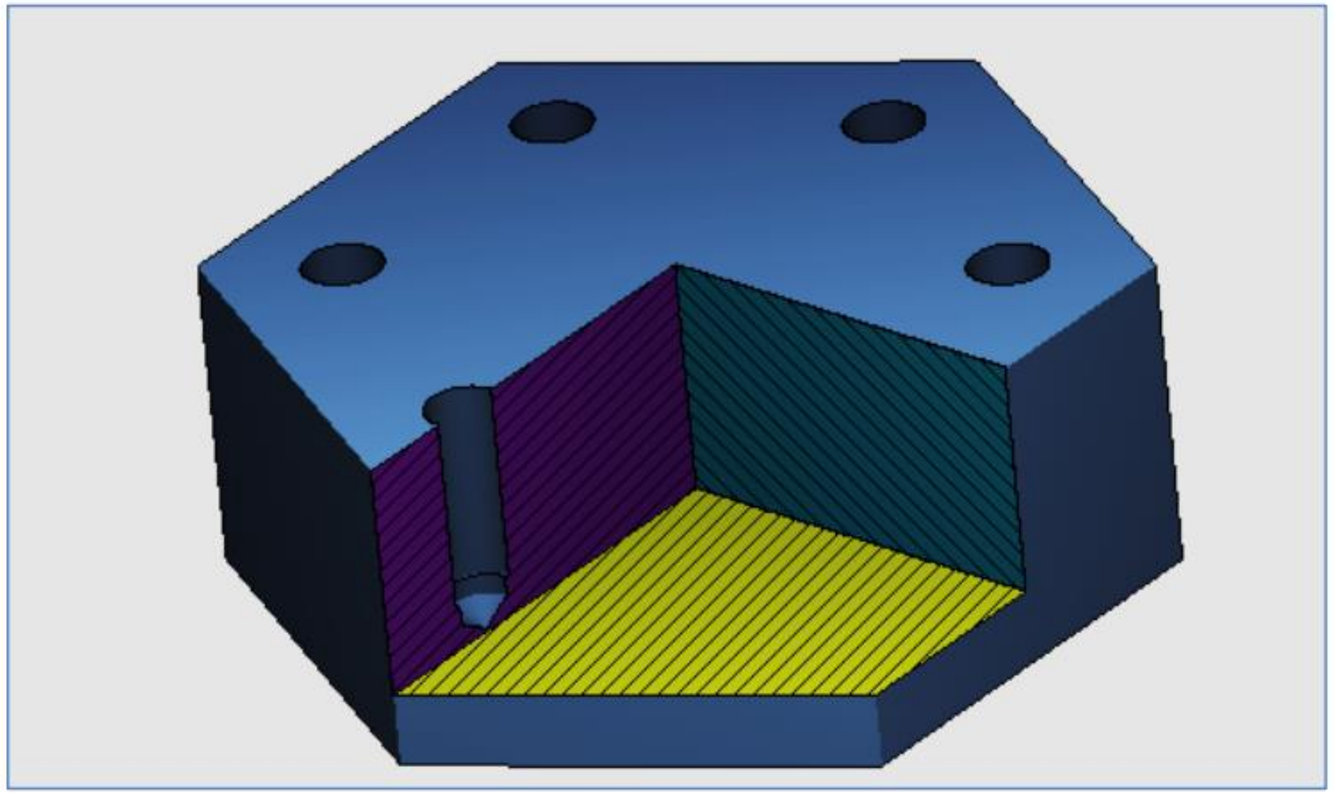

Fig. 249. Three-dimensional representation of the workpiece

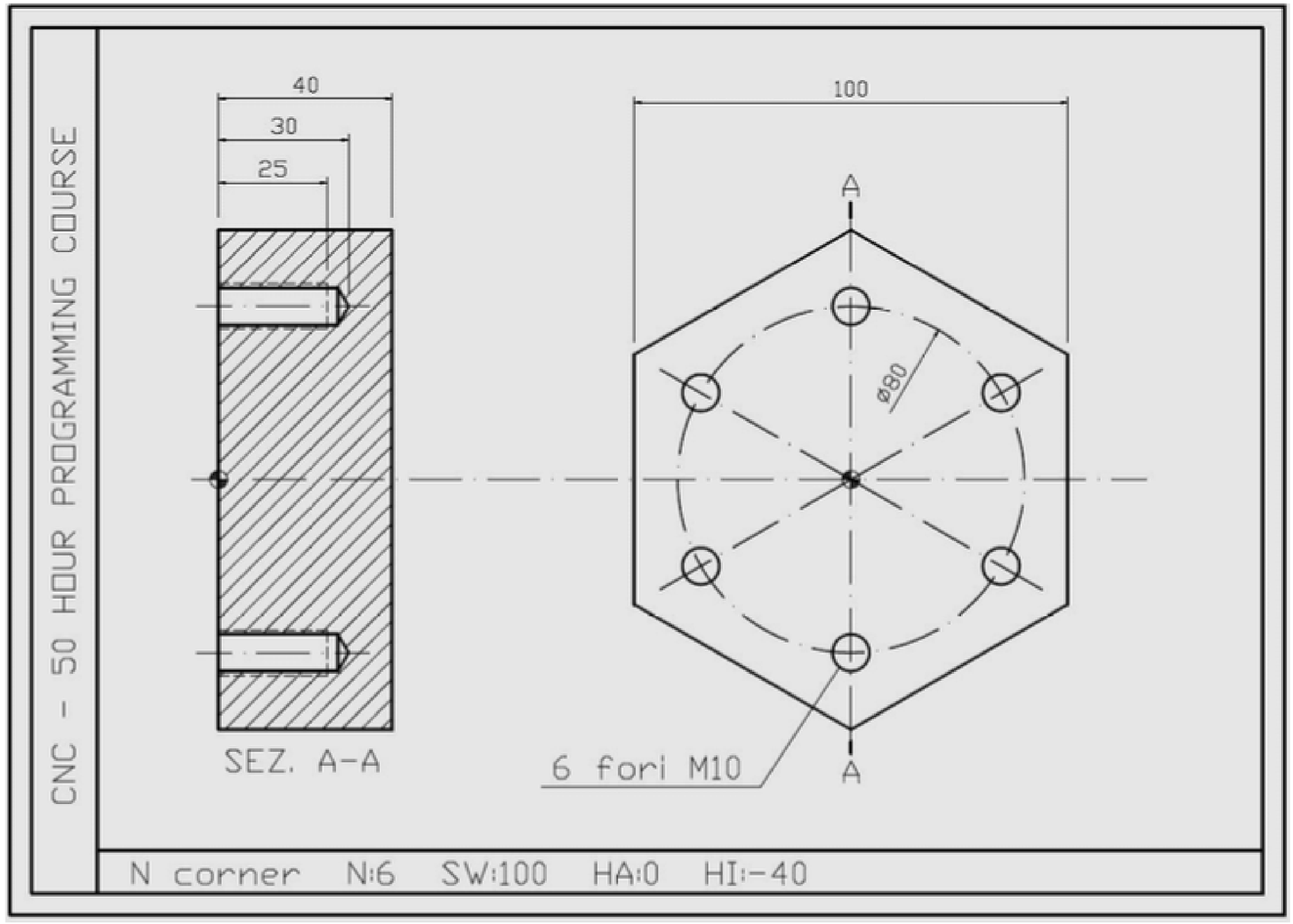

Fig. 250. Drawing of the part to create

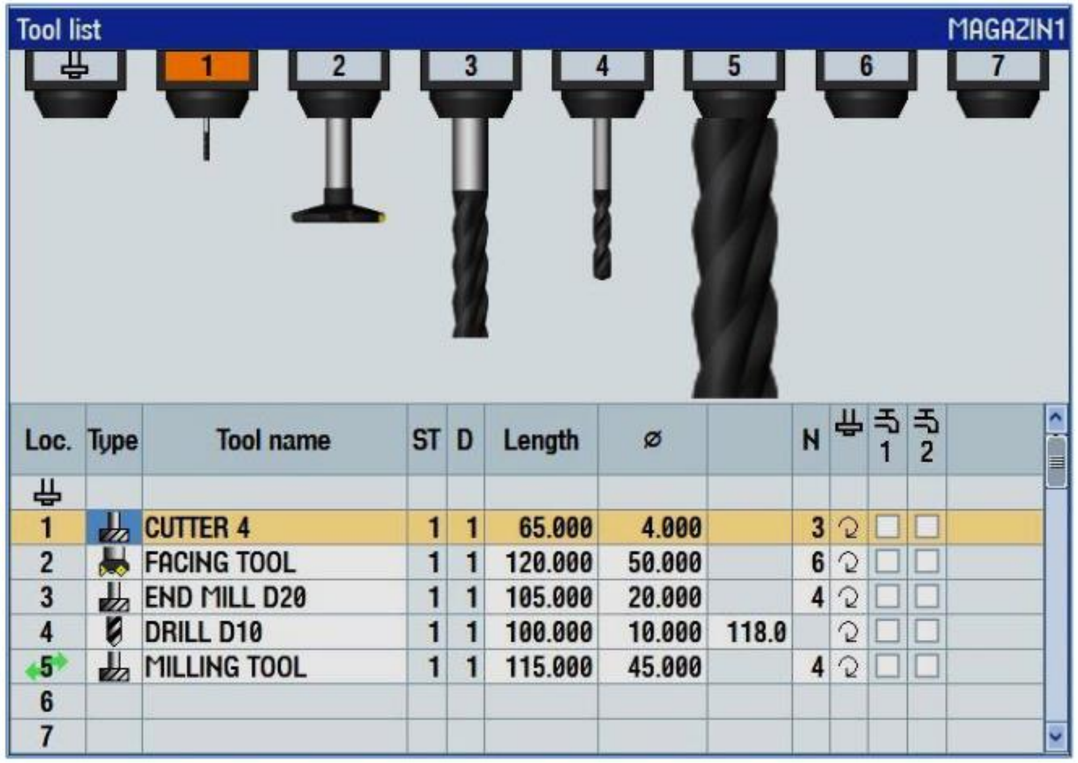

Fig. 251. List of tools to be created and used in the test program

Tooling sequence	Tool name	Operation	Cutting speed (m/min)	Feed rate (mm/rev)
1 st	T2 D1	Flattening	100	0.6
2 nd	T5 D1	Cylinder D112	120	0.3 climb milling
3 rd	T3 D1	Pocket D80	90	0.2 climb milling
4 th	T3 D1	Four milling operations	110	0.32
5 th	T1 D1	N2 holes D4	80	0.06
6 th	T4 D1	N4 holes D10	80	0.12

Fig. 252. Sequence of tooling operations and cutting parameters to use for the test

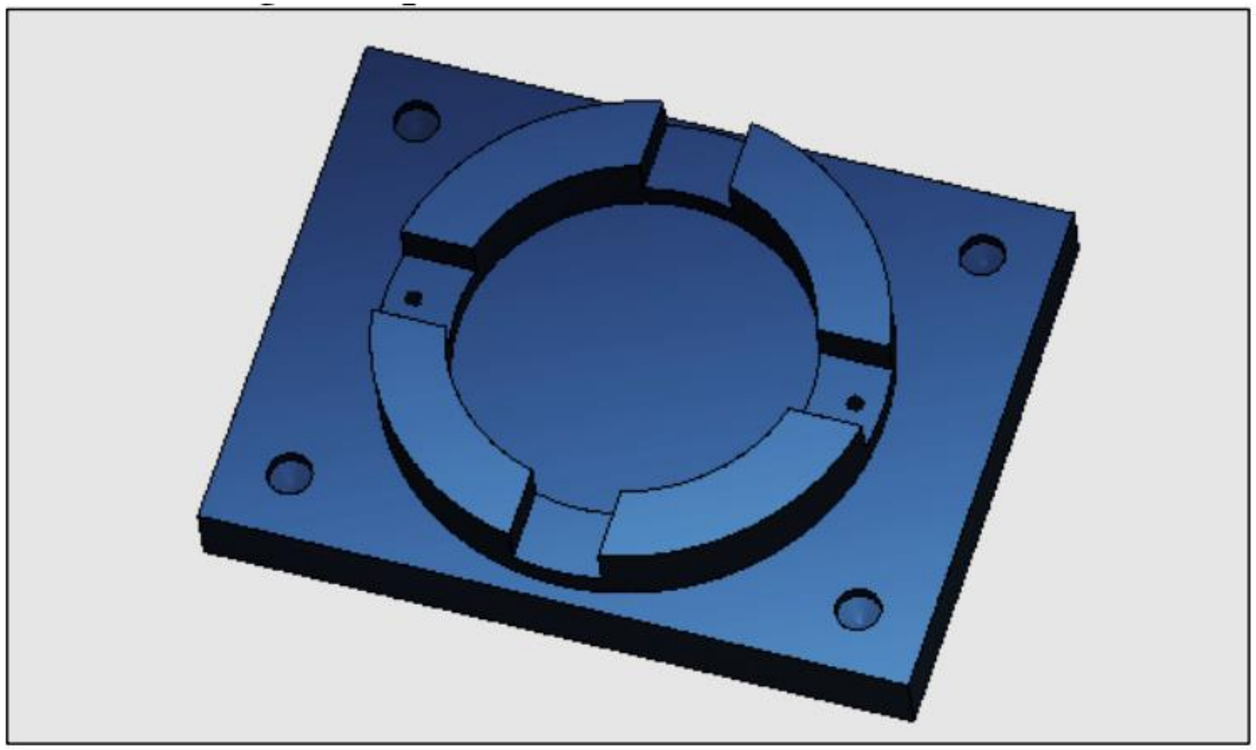

Fig. 253. Drawing of the part to create

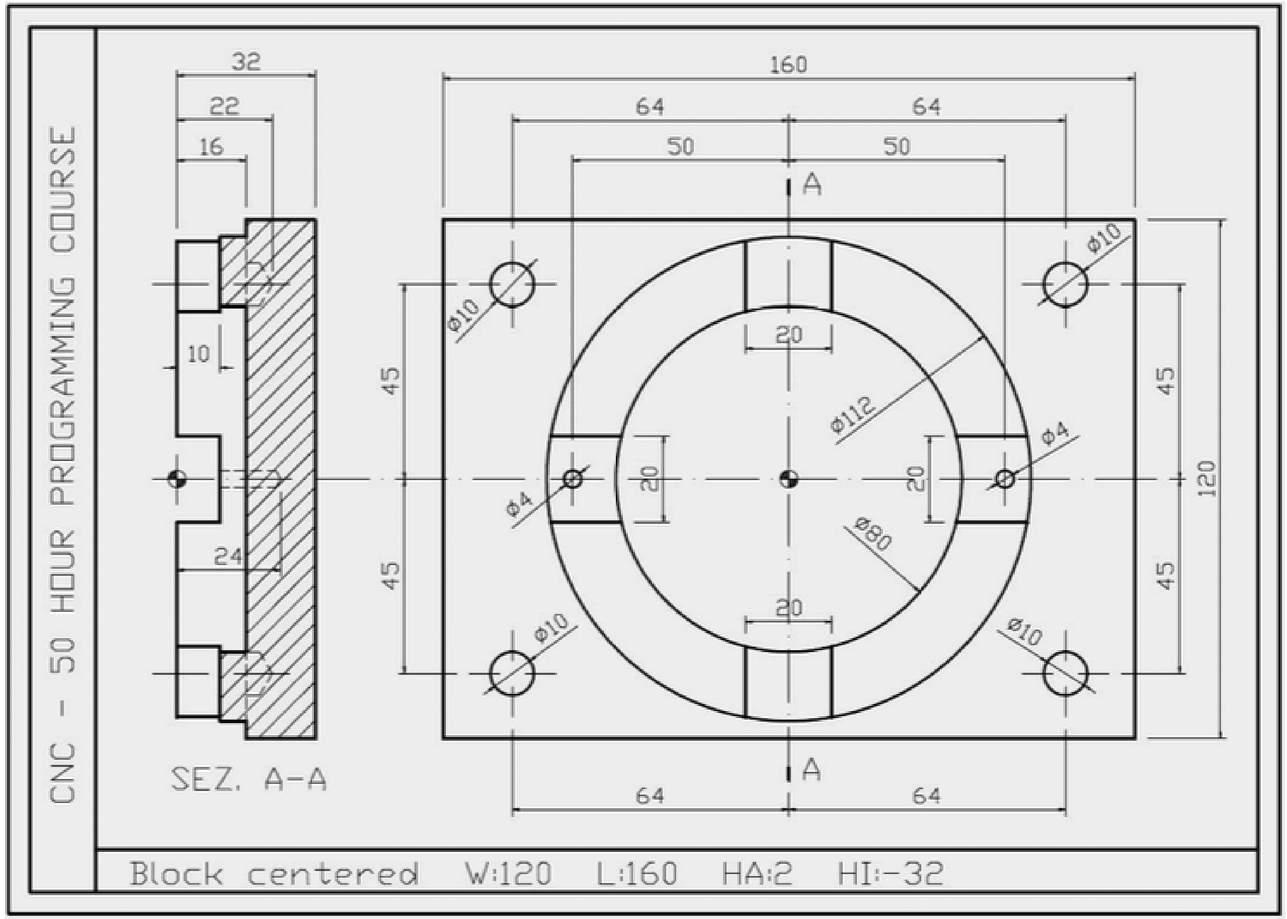

Fig. 253. Drawing of the part to create